Truma Trumatic SL3002/SLP3002 from July 1981 to March 1993

REF	TRUMA	DESCRIPTION	GROVE NO.
02	30030-42700	MICA WINDOW SMALL 42 X 15	**842700**
02	30030-02700	MICA WINDOW LARGE 58 X 12	**603299**
03	30030-02800	EXHAUST FITTING – OLD	
04	10030-25000	O RING 35X 5 – OLD EXHAUST DUCT FIT	**825000**
05	10010-84500	SCREW M5 X 16	
06	30030-03600	EXHAUST DUCT FITTING – NEW	**803600**
07	10030-26500	O RING 53 X 5 – NEW EXHAUST DUCT FIT	**826500**
19	30030-16300	EARTH SPRING (ONLY SLP 3002/3)	
21	30030-29800	HOLDER FOR HEAT DETECTOR	
22	30050-53000	AUTOMATIC IGNITOR CPL (FROM 07/99)	**853000**
23	30020-13300	BATTERY BOX (FOR OLD IGNITOR 30040-64200)	**813300**
25	30030-16100	HEAT SCREEN FOR IGNITOR	**816100**
26	30030-01300	IGNITOR ROD – NEW	**801300**
27	30050-58000	SAFETY PILOT VALVE S3002/5	**859700**
28	30030-03700	CONTACT SWITCH WITH CONNECTING CABLE BLACK/BROWN (FOR OLD IGNITOR 30040-64200)	
30	30030-12200	MAGNET INSERT – MINI	
32	30030-03100	FEED PIPE + DBL RING L8 + MALE FITTING	**803100**
35	30030-01900	BURNER CPL.SL3002/3 50MBAR WITH SPARK ELEC, THERMOCOUPLE + BURNER TUBE	
35	30030-02000	BURNER CPL.SL3002/3 30MBAR AS PER -01900	
35	30030-03900	BURNER CPL.SL3002/3 50MBAR WITH IG PLUG 95CM LONG, THERMOCOUPLE + BURNER TUBE	
35	30030-04000	BURNER CPL.SLP3002/3 30MBAR AS PER -03900	
36	30030-00400	BURNER 50MBAR	
36	30040-18600	BURNER 30MBAR	**803200**
37	30030-02900	SPARK ELECTRODE AUTO 45CM LONG	**802900**
37	30030-03000	SPARK ELECTRODE PIEZO 95CM LONG	**803000**
39	30050-13900	THERMOCOUPLE + NUT 250MM LONG	**813900**
40	30030-02300	IGNITOR BURNER TUBE 50MBAR + RING & MALE FITTING	
40	30030-02400	IGNITOR BURNER TUBE 30MBAR (AS PER -02300)	
41	30030-02100	BURNER TUBE 50MBAR (AS PER -02300)	
41	30030-02200	BURNER TUBE 30MBAR (AS PER -02300)	
42	30030-04300	EXTENSION CPL WITH PERFORATED PLATE & EXTENSION SPRING (AFTER 12/88)	**804300**
43	30030-28500	EXTENSION SPRING (AFTER 12/88)	**828500**
44	30030-14900	DISTANCE SHEET (AFTER 12/88)	
45	30030-17500	PERFORATED PLATE	**817500**
46	30030-01000	EXTENSION CPL WITH PERFORATED PLATE (UP TO 11/88)	
49	30030-28900	DISTANCE SHEET (UP TO 11/88)	
51	30030-00300	PIEZO IGNITOR – COMPLETE	**800300**
52	30030-35000	FRONT CASE COMPLETE – BROWN	

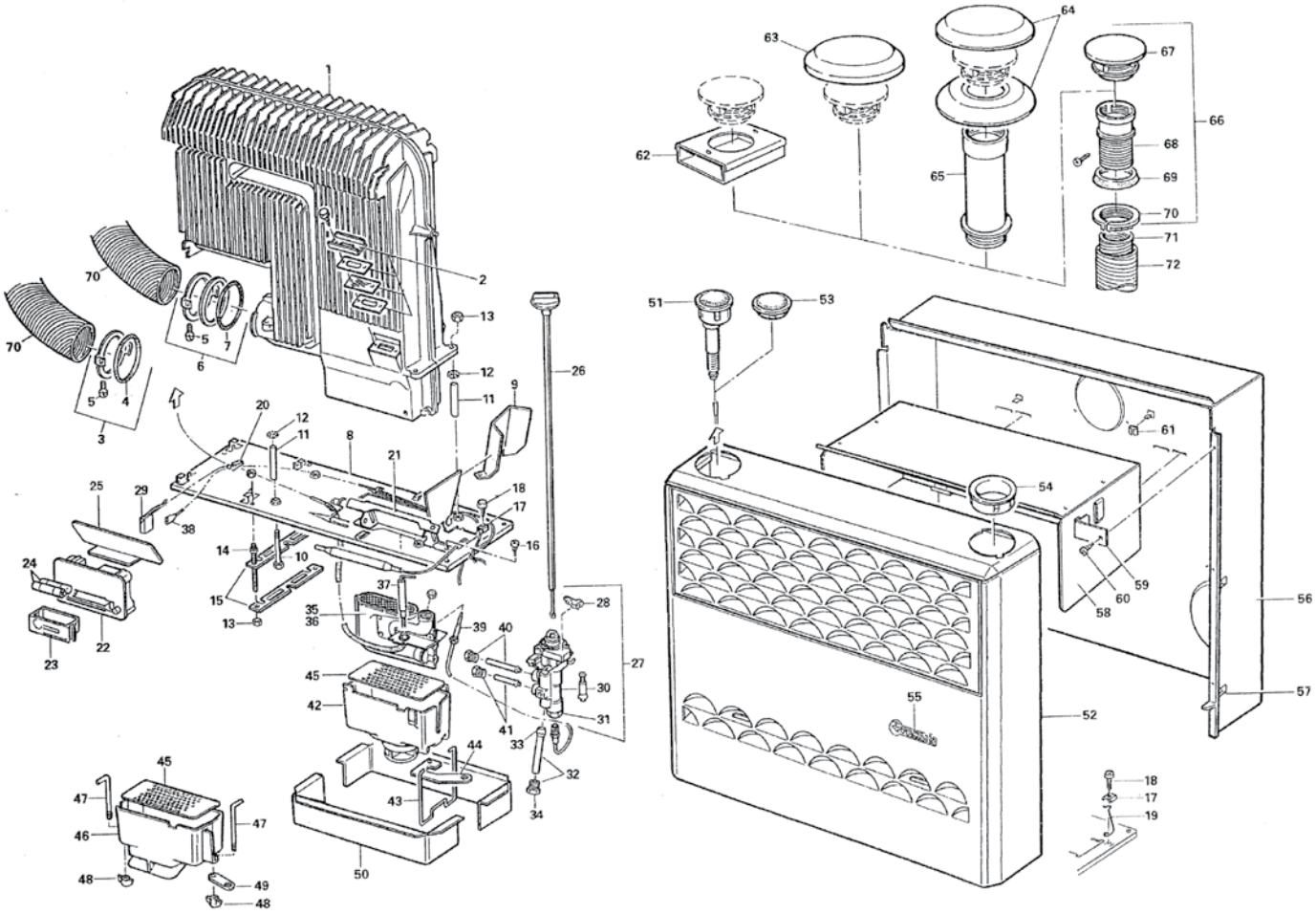

If a part has no Grove number against it, we can order from Truma if available

Trumatic S 2200/S 2200P

Trumatic S 2200/S 2200 P LP gas heaters, only approved for caravans			Grove No.
Product	**Part no.**	**Description**	
	Operating knob on **left** and exhaust duct connection on **right** (without cowl kit)		
	31110-02	**Trumatic S 2200,** 30 mbar, with automatic ignitor	
	31130-02	**Trumatic S 2200 P,** 30 mbar, with Piezo ignitor	**831132**
	Operating knob on **left** and exhaust duct connection on **right** (without cowl kit)		
	31110-01	**Trumatic S 2200,** 30 mbar, with automatic ignitor	**831111**
	31130-01	**Trumatic S 2200 P,** 30 mbar, with Piezo ignitor	**831131**

Technical details

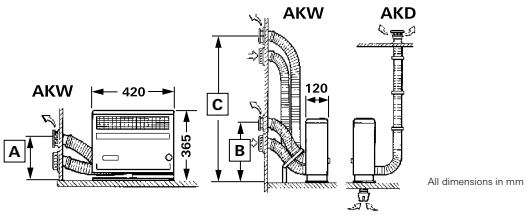

Rated thermal output	1850 W		
Gas consumption	50 – 170 g/h		
Weight	6.7 kg		
Product ID number	CE-0085AP0324		
Installation variant	**A**	**B**	**C**
Duct lengths up to	35 cm	75 cm	120 cm

Cowl kits

Product	**Part no.**	**Description**		
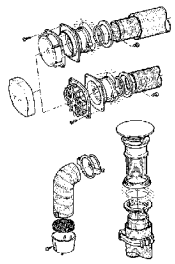	30320-01	**Wall cowl kit short,** installation variants A + B (complete with 1 m exhaust duct AE 3, 0.5 m insulating duct ÜR and cowl covers)		
	30320-02	**Wall cowl kit long,** installation variant C (complete with 1.5 m exhaust duct AE 3, 0.75 m insulating duct, 1 double duct support and cowl covers)		**830322**
	30320-03	**Roof cowl kit** (cowl AK 3, 2.5 m exhaust duct, 2 m insulating duct, 3 clips and air intake fitting)		

For single cowl parts and cowl accessories, see page 67 onwards.

Installation accessories

	Rear panel with heat deflector for Trumatic S 2200 (for free-standing installation)			
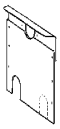	30190-01	**Rear panel RWSL** for exhaust duct connection on right		**830191**
	30190-00	**Rear panel RWS** for exhaust duct connection on left		**830190**
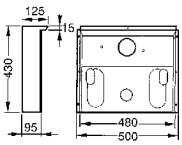	30171-01	**Installation box EKM** for S 2200, exhaust duct connection on right and left (for integrated installation in a wardrobe)		
	30280-00	**Double duct support DSW** for exhaust and infeed ducts through the side walls (included in the wall cowl kit long), **essential** for duct lengths of 75 and 120 cm.		

If a part has no Grove number against it, we can order from Truma if available

Trumatic S 3002/S 3002P

TRUMATIC S 3002/S 3002 P

Grove No.

LP gas heaters, approved for caravans and motor homes
Operation is only permitted with an original Truma front case!
Front case not included in the scope of delivery, please order separately.

Product	Part no.	Description		Grove No.
	31311-01	**Trumatic S 3002,** 30 mbar, with automatic ignitor, thermostat and installation box (without front case)		**831311**
	31291-01	**Trumatic S 3002 P,** 30 mbar, with Piezo ignitor, thermostat and installation box (without front case)		**831291**
	30040-50100	**Front case,** sepia brown		**830040B**
	30040-50200	**Front case,** agate grey		**830040G**

Technical details

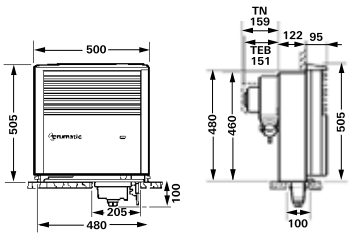

All dimensions in mm

Rated thermal output	3400 W
Gas consumption	30 – 280 g/h
Weight	9.8 kg
Product ID number	CE-0085AP0325

Roof cowl kit

Product	Part no.	Description		Grove No.
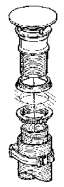	30330-00	**Roof cowl kit,** consisting of Cowl AK 3, Ø 60 mm, 2.5 m exhaust duct, 2 m insulating duct and 3 clips		**830030**
	30700-03	**Cowl top T3** a required component for operating the heater whilst driving		**830703**

For single cowl parts, cowl tops for motor homes and cowl accessories for caravans, see page 67 onwards.

Installation accessories

				Grove No.
	30030-85500	**Gas line interior connection** for Trumatic S 3002, right fitting		**885500**
	30030-85600	**Gas line interior connection** for Trumatic S 3002, left fitting		**885600**
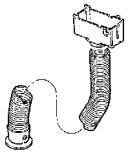	30030-04800	**Air intake extension,** complete with 50 cm air intake duct. For difficult installation situations, for example, installation on a plinth or in vehicles with a double floor		**804800**

If a part has no Grove number against it, we can order from Truma if available

Truma Trumatic S3002/S3002P from April 1993

REF	PART NO	DESCRIPTION	GROVE PT NO
2	30030-42700	MICA WINDOW 42 X 15	**842700**
3	30030-03600	EXHAUST DUCT FITTING	**803600**
4	10030-26500	O RING 53X 5 MM	**826500**
5	10010-84500	SCREW M5 X 16	
11	30030-85700	EARTH SPRING (ONLY S 3002 P)	
13	30030-29300	EDGE PROTECTION	
14	30050-53000	AUTO IGNITOR (FROM 07/99)	**853000**
15	30020-13300	BATTERY BOX (FOR OLD IGNITOR 30040-64200)	**813300**
17	30030-16100	HEAT SCREEN FOR IGNITOR	**816100**
18	30030-01300	IGNITION ROD (UNTIL 05/96)	**801300**
19	30040-13600	IGNITION ROD (AFTER 05/96)	**813600**
20	30040-40400	CONTROL KNOB (AFTER 05/96)	**840400**
21	30030-08900	SAFETY PILOT VALVE	**859700**
22	30030-03700	CONTACT SWITCH WITH CONNECTING CABLE	
		BLACK/BROWN (FOR OLD IGNITOR 30040-64200)	
22	30050-32500	CONTACT SWITCH WITH CONNECTING CABLE	
		GREY/GREY-RED (FOR NEW IGNITOR 30050-53000)	**858100**
24	30030-12200	MAGNET INSET (MINI)	
26	30030-03100	FEED PIPE WITH DOUBLE CONICAL	
		RING AND MALE FITTING	**803100**
29	30030-01900	BURNER COMPLETE S3002 50MBAR	
29	30030-02000	BURNER COMPLETE S3002 30MBAR	
29	30030-03900	BURNER COMPLETE S3002P 50MBAR (OLD FRONT CASE)	
29	30030-04000	BURNER COMPLETE S3002P 30MBAR (OLD FRONT CASE)	
29	30040-64700	BURNER COMPLETE S3002P 50MBAR (NEW FRONT CASE)	
29	30040-64600	BURNER COMPLETE S3002P	
		30MBAR (NEW FRONT CASE)	**864600**
30	30030-00400	BURNER 50MBAR	
30	30030-03200	BURNER 30MBAR	**803200**
31	30030-02900	SPARK ELECTRODE AUTOMATIC 45CM LONG	**802900**
31	30030-03000	SPARK ELECTRODE PIEZO 95CM LONG	
		FOR OLD DESIGN FRONT CASE	**803000**
31	30040-64500	SPARK ELECTRODE PIEZO 75CM LONG	
		FOR NEW DESIGN FRONT CASE	**864500**
34	30050-13900	THERMOCOUPLE WITH NUT 250MM LONG	**813900**
35	30030-02300	IGN BURNER TUBE 50MBAR+ RING + MALE FITTING	
35	30030-02400	IGN BURNER TUBE 30MBAR (DETAILS AS 30030-02300)	
36	30030-02100	BURNER TUBE 50MBAR (DETAILS AS 30030-02300)	
36	30030-02200	BURNER TUBE 30MBAR (DETAILS AS 30030-02300)	

REF	PART NO	DESCRIPTION	GROVE PT NO
37	30030-04300	EXTENSION C/W PERFORATED PLATE + SPRING	**804300**
38	30030-17500	PERFORATED PLATE	**817500**
39	30030-28500	EXTENSION SPRING	**828500**
40	30030-19400	DISTANCE SHEET	
42	30030-00300	PIEZO IGNITOR (APPLIANCES WITH OLD STYLE CASE)	**800300**
43	30040-62900	PIEZO IGNITOR (APPLIANCES WITH NEW STYLE CASE)	**862900**
44	30040-64000	EARTH CABLE	
45	30030-04800	AIR INTAKE EXTENSION (C/W 50CM TUBE)	**804800**
FRONT CASE IN OLD DESIGN			
46	30030-35000	FRONT CASE COMPLETE (BROWN)	
47	30030-18700	KNOB SOCKET 818700	
48	30030-18800	BLANK COVER	
49	30030-29200	TYPE PLATE	
FRONT CASE IN NEW DESIGN			
56	30040-50100	FRONT CASE COMPLETE (SEPIA BROWN)	**830040B**
56	30040-50200	FRONT CASE COMPLETE (AGATE GREY)	**830040G**
57	30040-60800	BLANK COVER 35MM	**860800**
57	30040-64900	BLANK COVER 35MM (WITH PRINT "ULTRAHEAT")	
58	30040-60900	BLANK COVER 50MM	**860900**
59	30040-60700	KNOB SOCKET	**860700**
60	30040-63000	SHELF	**863000**
64	30040-36500	TYPE PLATE FOR FRONT CASE (SEPIA BROWN)	
64	30040-35000	TYPE PLATE FOR FRONT CASE (AGATE GREY)	
67	30040-60000	RETAINING SPRING	**860000**
FLUE DUCTING			
75	30700-01	COWL TOP T1	
76	30700-02	COWL TOP T2	**830702**
77	30700-03	COWL TOP T3	**830703**
78	30010-20800	COWL EXTENSION AKV 15CM	**820800**
79	30630-07	EXHAUST COWL ASSEMBLY	**801263**
80	30010-20900	COWL ROOF	**801020**
81	30010-20500	COWL PART	
82	30010-20600	SEALING RING	**820600**
83	30010-20700	SCREWING RING	
84	30140-00	EXAUST DUCT AE 3 55MM DIA (PER METRE)	**801536**
85	40230-00	INSULATING DUCT UR 65MM DIA (PER METRE)	**801288**
	30010-29200	RETROFIT KIT FOR AUTO IGNITION	**829200**

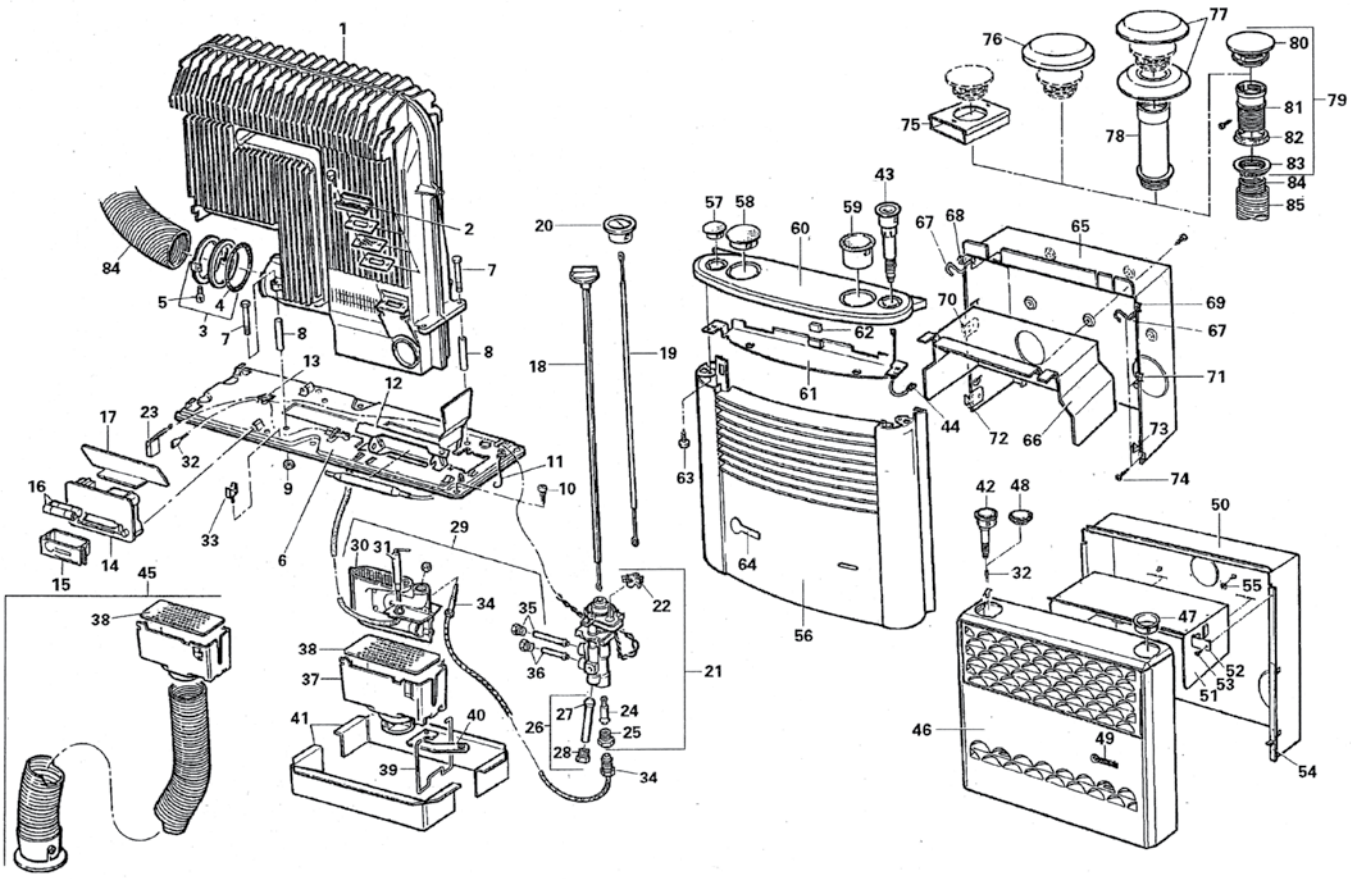

If a part has no Grove number against it, we can order from Truma if available

Trumatic S 5002/S 5002E

Trumatic S 5002/S 5002 E LP gas heaters, only approved for caravans

Grove No.

For motor vehicles (e.g. motor homes), Truma offers the Trumatic S 3002 (P) (page 52), Trumatic E (page 66 onwards), Combi (E) (page 45) and Combi D (page 49) heaters, which have been type-tested by the German Federal Motor Transport Authority (Kraftfahrt-Bundesamt).

Operation is only permitted with an original Truma front case!

Attention: Front case not included in the scope of delivery, please order separately.

Product	Part no.	Description	
		Trumatic S 5002, 30 mbar, for LP gas, with automatic ignitor, thermostat and installation box (without front case)	**831511**
	31511-01	**Trumatic S 5002,** 30 mbar	
	31511-03	**Trumatic S 5002,** 30 mbar, with special installation box for 2 fans	
		Trumatic S 5002 E, 20 mbar, for natural gas (suitable for 20 mbar to 25 mbar, list of relevant countries available on request), with automatic ignitor, thermostat and installation box (without front case)	
	31551-01	**Trumatic S 5002 E,** 20 mbar	
	31551-03	**Trumatic S 5002 E,** 20 mbar, with special installation box for 2 fans	
		Trumatic S 5002 E, 25 mbar, for natural gas (Netherlands) with automatic ignitor, thermostat and installation box (without front case)	
	31551-05	**Trumatic S 5002 E,** 25 mbar	
CE	31551-07	**Trumatic S 5002 E,** with special installation box for 2 fans	
	30050-60100	**Front case,** sepia brown	**830050B**
	30050-60200	**Front case,** agate grey	**830050G**

Trumatic S 5002/S 5002 E LP gas heaters, only approved for caravans

Technical details

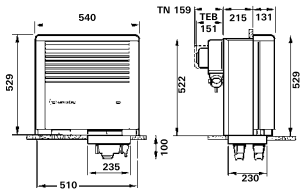

All dimensions in mm

Rated thermal output	5500 W (propane/butane) 4600 W (natural gas)
Gas consumption	60 – 480 g/h (propane/butane) 64.5 – 517 l/h (natural gas)
Weight	17.5 kg
Product ID number	CE-0085AP0326

Roof cowl kit

Product	Part no.	Description	
	30350-00	**Roof cowl kit,** consisting of Cowl AKL 5, Ø 70 mm, 2.5 m exhaust duct, 2 m insulating duct and 3 clips	

For single cowl parts and cowl accessories for the caravan, see up to page 61.

Installation accessories

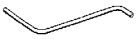	30050-30500	**Gas line interior connection** for Trumatic S 5002, right and left fitting	
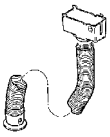	30030-04800	**Air intake extension** complete with 50 cm air intake duct. For difficult installation situations, for example, installation on a plinth or in vehicles with a double floor, **2 units are required**.	**804800**

Truma Trumatic SL5002 effective October 1981 to May 1993

REF	PART NO	DESCRIPTION	GROVE PT NO
2	30030-42700	MICA WINDOW SMALL 42 X 15	**842700**
2	30030-02700	MICA WINDOW LARGE 58 X 12	**603299**
5	30050-10600	IGNITION PIPE - OLD - COMPLETE	
6	30050-18700	IGNITION PIPE - NEW - COMPLETE	
7	10030-23400	O RING 16 X 2.5	
8	30050-21000	EXHAUST COLLECTOR - OLD - COMPLETE	
9	30050-01400	EXHAUST DUCT FITTING - OLD	
10	10030-25000	0 RING 35 X 5 (FOR OLD EXHAUST DUCT FITTING)	**825000**
11	30050-32400	EXHAUST COLLECTOR - NEW - COMPLETE	
12	30050-03200	EXHAUST DUCT FITTING - NEW	
13	10030-26500	O RING 53 X 5 (FOR NEW EXHAUST DUCT FITTING)	**826500**
14	30050-03000	BOLT WITH NUT	
21	30030-18000	CABLE FIXING	
22	30050-15600	CABLE CLAMP	
23	30050-53000	AUTOMATIC IGNITOR COMPLETE (FROM 07/99)	**853000**
24	30020-13300	BATTERY BOX (FOR OLD IGNITOR 30040-64200)	**813300**
26	30030-16100	HEAT SCREEN FOR IGNITOR	**816100**
27	30050-00300	IGNITION ROD - NEW	**801301**
28	30050-33000	SAFETY PILOT VALVE + SWITCH (USE ONLY WITH IGNITION ROD PT NO 30050-00300)	**859700**
29	30030-03700	CONTACT SWITCH (WITH CONNECTING CABLE BLACK/BROWN FOR OLD IGNITOR 30040-64200)	
29	30050-32500	CONTACT SWITCH (WITH CONNECTING CABLE GREY/GREY RED FOR NEW IGNITOR 30050-53000)	**858100**
31	30030-17900	EARTHING TERMINAL	
32	10010-64200	SCREW B 3.5 X 6.5	
33	30030-12200	MAGNET INSET (MINI)	
35	30030-03100	FEED PIPE + RING L8 + MALE FITTING	
38	30030-29800	HOLDER OF HEAT DETECTOR	
39	30050-01700	BURNER SET COMPLETE 50MBAR	
39	30050-01800	BURNER SET COMPLETE 30MBAR	
40	30050-01900	BURNER SET 50MBAR	**801900**
40	30050-02000	BURNER SET 30MBAR	**802000**

REF	PART NO	DESCRIPTION	GROVE PT NO
41	30050-00700	IGNITION BURNER TUBE 50MBAR + RING + M/F	
41	30050-00800	IGNITION BURNER TUBE 30MBAR + RING + M/F	
42	30050-00900	BURNER TUBE 50MBAR + RING + M/F	
42	30050-01000	BURNER TUBE 30MBAR + RING + M/F	
43	30050-08900	CLAMP SHEET KIT L/H & R/H	
44	CLAMP SHEET	RIGHT (SEE POS 44)	
45	30050-01500	SPARK ELECTRODE 55CM LONG	**801501**
47	30050-13900	THERMOCOUPLE WITH NUT 250MM LONG	**813900**
48	30030-01000	EXTENSION - OLD (WITH PERFORATED PLATE TO 11/98)	
49	30030-17500	PERFORATED PLATE	**817500**
50	30030-14200	HOOK BOLT M5 (FOR EXTENSION OLD UP TO 11/98)	
51	30010-20000	WING NUT M5 (FOR EXTENSION OLD UP TO 11/98)	
52	30050-18900	DISTANCE SHEET (FOR EXTENSION OLD UP TO 11/98)	
53	30030-04300	EXTENSION - NEW (WITH PERFORATED PLATE AND EXTENSION SPRING AFTER 12/88	**804300**
54	30030-28500	EXTENSION SPRING (FOR EXTENSION NEW AFTER 12/88)	**828500**
55	30050-12600	DISTANCE SHEET (FOR EXTENSION NEW AFTER 12/88)	
57	30050-50100	FRONT CASE COMPLETE (SEPIA BROWN)	
59	30030-18800	BLANK COVER	
60	30030-18700	KNOB SOCKET	**818700**
61	30030-29200	TYPE PLATE (UNTIL 05/96)	
61	30050-29100	TYPE PLATE (AFTER 05/96)	
67	30700-01	COWL TOP T1	
68	30700-02	COWL TOP T2	**830702**
69	30700-03	COWL TOP T3	**830703**
70	30010-20800	COWL EXTENSION AKV 15CM	**820800**
71	30651-01	COWLAKL 5 DIA 70MM	**830651**
72	30010-20900	COWL ROOF	**801020**
74	30050-17800	SEALING RING FOR AK 5 DIA 70MM	
75	30050-17900	SCREWING RING FOR AK 5 DIA 70MM	
76	30160-00	EXHAUST DUCT AE 5 DIA 65MM (PER METRE)	
77	40250-00	INSULATING DUCT UR 5 DIA 75MM	

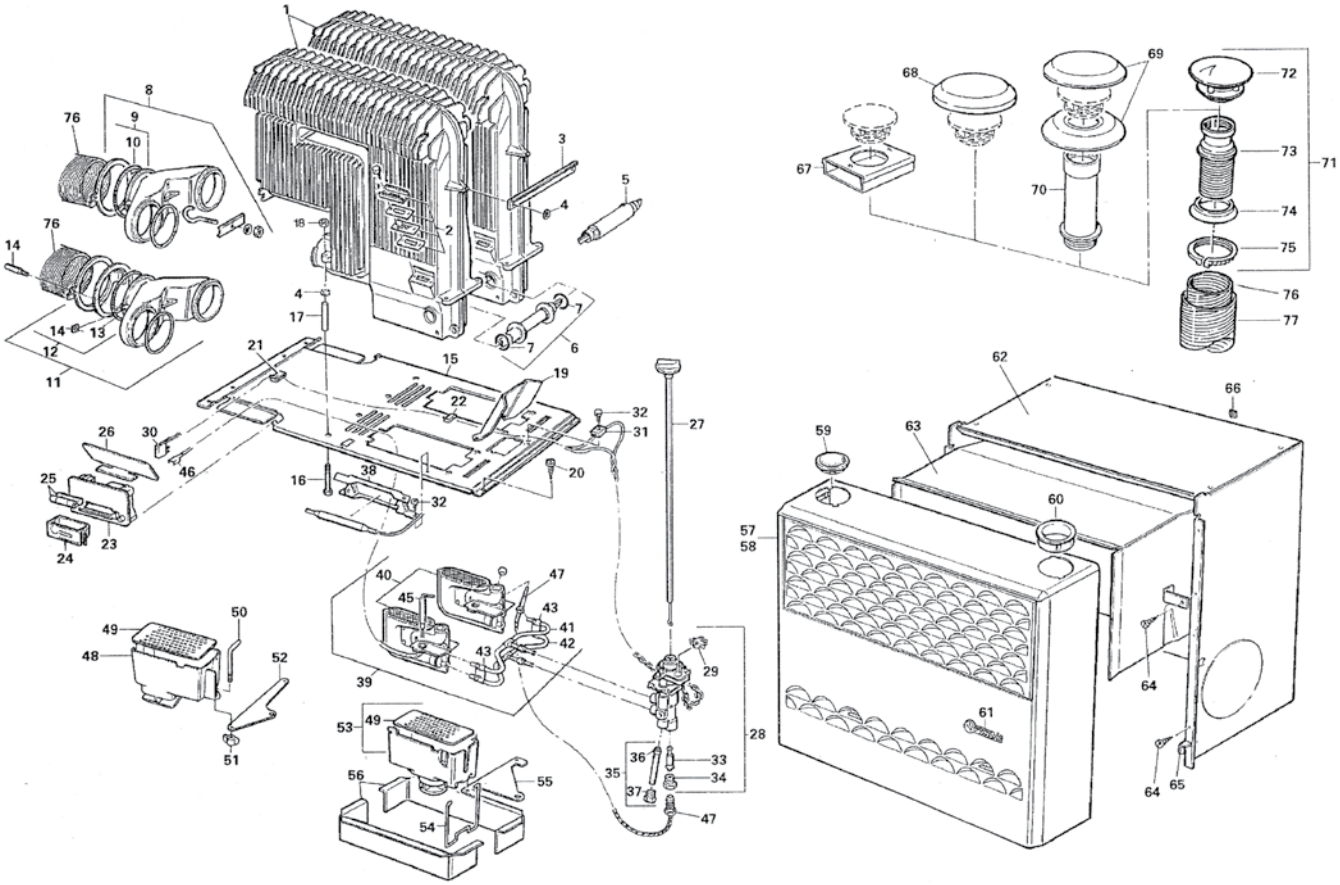

If a part has no Grove number against it, we can order from Truma if available

Truma Trumatic S5002 effective May 1993

REF	PART NO	DESCRIPTION	GROVE PT NO
2	30030-42700	MICA WINDOW 42 X 15	**842700**
3	30050-10500	CROSSBAR TUBE	**S40205**
7	30050-32400	EXHAUST COLLECTOR (COMPLETE WITH EXHAUST DUCT FITTING)	
8	10030-26500	O RING 53 X 5MM	**826500**
9	30050-33100	EXHAUST DUCT FITTING COMPLETE	
10	10010-86000	SCREW M5 X 20	
11	30050-32600	COLLECTOR FITTING COMPLETE	
18	30030-18000	CABLE FIXING	
19	30050-53000	AUTOMATIC IGNITOR COMPLETE (FROM 07/99)	**853000**
20	30020-13300	BATTERY BOX (FOR OLD IGNITOR 30040-64200)	**813300**
22	30030-16100	HEAT SCREEN FOR IGNITOR	**816100**
23	30050-00300	IGNITION ROD TILL 05/98	**801301**
24	30050-53700	IGNITION ROD AFTER 05/98	**853700**
25	30040-40400	CONTROL KNOB AFTER 05/98	**840400**
26	30050-55500	SAFETY PILOT VALVE (COMPLETE WITH HEAT DETECTOR & CONTACT SWITCH TO 05/98 WITH NEW CASE)	**859700**
26	30050-33000	SAFETY PILOT VALVE (COMPLETE WITH HEAT DETECTOR & CONTACT SWITCH TO 05/98 WITH OLD CASE)	**859700**
27	30030-03700	CONTACT SWITCH (WITH CONNECTING CABLE BLACK/BROWN,FOR OLD IGNITOR 30040-64200)	
27	30050-32500	CONTACT SWITCH (WITH CONNECTING CABLE GREY/GREY RED,FOR NEW IGNITOR 30050-53000	**858100**
29	30030-12200	MAGNET INSET (MINI)	
31	30030-03100	FEED PIPE + DBL RING & MALE FITTING	**803100**
34	30030-29800	HOLDER FOR HEAT DETECTOR	
36	30050-01700	BURNER SET 50MBAR (COMPLETE WITH SPARK ELECTRODE,THERMOCOUPLE & BURNER TUBES)	
36	30050-01800	BURNER SET 30MBAR (COMPLETE WITH SPARK ELECTRODE,THERMOCOUPLE & BURNER TUBES)	
37	30050-01900	BURNER SET 50MBAR	**801900**
37	30050-02000	BURNER SET 30MBAR	**802000**
38	30050-00700	IGNITION BURNER TUBE 50MBAR (COMPLETE WITH DBL RING & MALE FITTING)	
38	30050-00800	IGNITION BURNER TUBE 30MBAR (COMPLETE WITH DBL RING & MALE FITTING)	
39	30050-00900	BURNER TUBE 50MBAR (COMPLETE AS PER 30050-00700)	
39	30050-01000	BURNER TUBE 30MBAR (COMPLETE AS PER 30050-00700)	

REF	PART NO	DESCRIPTION	GROVE PT NO
35	30030-02400	IGN BURNER TUBE 30MBAR (DETAILS AS 30030-02300)	
36	30030-02100	BURNER TUBE 50MBAR (DETAILS AS 30030-02300)	
36	30030-02200	BURNER TUBE 30MBAR (DETAILS AS 30030-02300)	
37	30030-04300	EXTENSION C/W PERFORATED PLATE + SPRING	**804300**
38	30030-17500	PERFORATED PLATE	**817500**
39	30030-28500	EXTENSION SPRING	**828500**
40	30030-19400	DISTANCE SHEET	
42	30030-00300	PIEZO IGNITOR (APPLIANCES WITH OLD STYLE CASE)	**800300**
43	30040-62900	PIEZO IGNITOR (APPLIANCES WITH NEW STYLE CASE)	**862900**
44	30040-64000	EARTH CABLE	
45	30030-04800	AIR INTAKE EXTENSION (C/W 50CM TUBE)	**804800**
FRONT CASE IN OLD DESIGN			
46	30030-35000	FRONT CASE COMPLETE (BROWN)	
47	30030-18700	KNOB SOCKET	**818700**
48	30030-18800	BLANK COVER	
49	30030-29200	TYPE PLATE	
FRONT CASE IN NEW DESIGN			
56	30040-50100	FRONT CASE COMPLETE (SEPIA BROWN)	**830040B**
56	30040-50200	FRONT CASE COMPLETE (AGATE GREY)	**830040G**
57	30040-60800	BLANK COVER 35MM	**860800**
57	30040-64900	BLANK COVER 35MM (WITH PRINT "ULTRAHEAT")	
58	30040-60900	BLANK COVER 50MM	**860900**
59	30040-60700	KNOB SOCKET	**860700**
60	30040-63000	SHELF	**863000**
64	30040-36500	TYPE PLATE FOR FRONT CASE (SEPIA BROWN)	
64	30040-35000	TYPE PLATE FOR FRONT CASE (AGATE GREY)	
67	30040-60000	RETAINING SPRING	**860000**
FLUE DUCTING			
75	30700-01	COWL TOP T1	
76	30700-02	COWL TOP T2	**830702**
77	30700-03	COWL TOP T3	**830703**
78	30010-20800	COWL EXTENSION AKV 15CM	**820800**
79	30630-01	COWL AK 3 DIA 60 MM COMPLETE	
80	30010-20900	COWL ROOF	**801020**
81	30010-20500	COWL PART	
82	30010-20600	SEALING RING	**820600**
83	30010-20700	SCREWING RING	
84	30140-00	EXAUST DUCT AE 3 55MM DIA (PER METRE)	**801536**
85	40230-00	INSULATING DUCT UR 65MM DIA (PER METRE)	**801288**
	30010-29200	RETROFIT KIT FOR AUTO IGNITION	**829200**

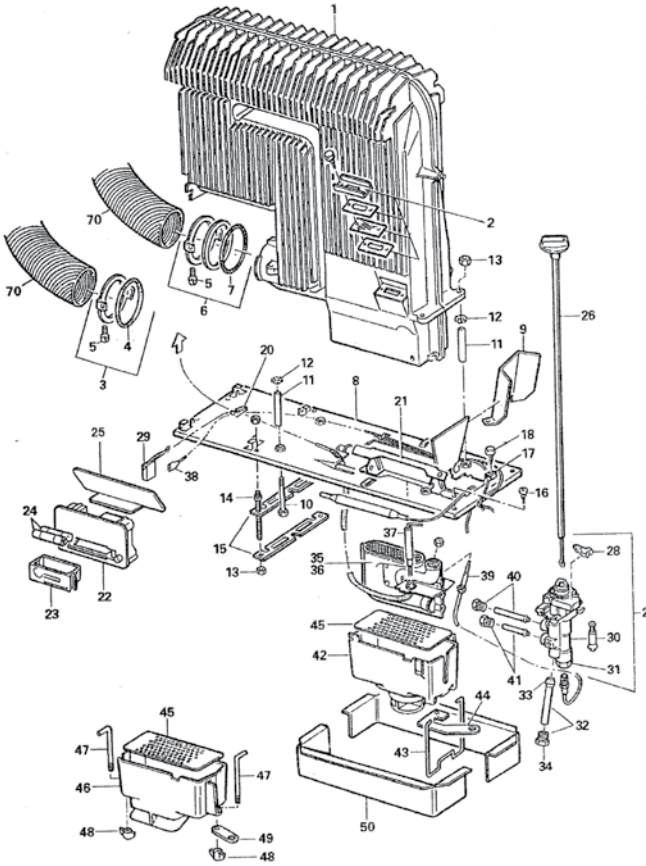

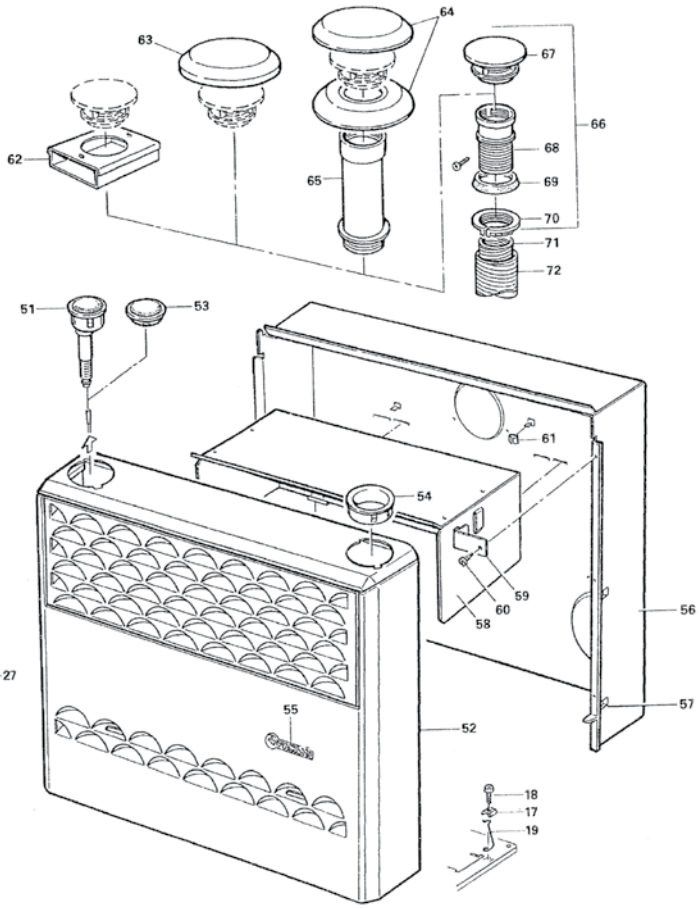

If a part has no Grove number against it, we can order from Truma if available

Trumatic S exhaust duct

Trumatic S exhaust duct			Grove No.
Product	Part no.	Description	
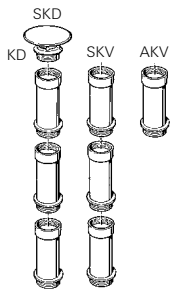	30610-00	**Cowl extension SKD,** 45 cm, with cowl roof KD, for caravans with special mountings or places with extreme wind conditions	
	30010-20900	**Cowl roof KD**	**801020**
	30690-00	**Cowl extension SKV,** 45 cm	**830690**
	30010-20800	**Cowl extension AKV,** 15 cm	**820800**
	30630-04	**Cowl lead-through UEK** for caravan protective double roofs	
	30700-03	**Cowl top T3** for operating the heater whilst driving, Essential for motor homes (not for the Truma S 55 T heater)	**830703**
	30700-02	**Cowl top T2** for operating the heater whilst driving (not for the Truma S 55 T heater)	**830702**
	30700-01	**Cowl top T1** for operating the heater whilst driving (not for the Truma S 55 T heater)	
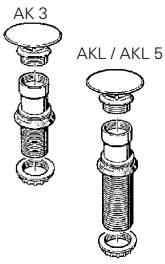	30630-01	**Roof cowl AK 3,** Ø 60 mm, for Trumatic 2200 and Trumatic S 3002 (P) heaters	
	30630-03	**Roof cowl AKL,** Ø 60 mm, special version for a roof thickness of 5 cm to 12 cm, for Trumatic S 2200 and Trumatic S 3002 (P) heaters	
	30651-01	**Roof cowl AKL 5,** 70 mm, for the Trumatic S 5002 heater, for a roof thickness of up to 12 cm	**830651**
	30260-00	**Wall cowl kit AKW** For Trumatic S 2200 heater (without covers or ducts)	**S40165**
	30270-00	**Cowl cover set KSW** (2 pieces) For wall cowl AKW	**830270**
	30290-00	**Roof cowl kit AKD** For Trumatic S 2200 heater (exhaust cowl AK 3 and air intake duct, without ducts)	
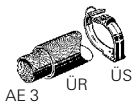	30140-00	**Exhaust duct AE 3,** Ø 55 mm (per metre) For Trumatic S 2200 (P) and Trumatic S 3002 (P) heaters	**801536**
	40230-00	**Insulating duct ÜR,** Ø 65 mm For Trumatic S 2200 (P) and Trumatic S 3002 (P) heaters	**801288** **20 metre roll**
	40241-01	**Clip ÜS,** agate grey, Ø 65 mm For fixing insulating duct ÜR to the vehicle wall	

If a part has no Grove number against it, we can order from Truma if available

Trumatic S exhaust duct & accessories

Trumatic S exhaust duct			Grove No.
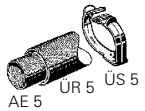	30160-00	**Exhaust duct AE 5,** Ø 65 mm (per metre) For Trumatic S 5002 and Truma S 55 T heaters	
	40250-00	**Insulating duct ÜR 5,** Ø 75 mm (per metre) For Trumatic S 5002 and Truma S 55 T heaters	
	40261-01	**Clip ÜS 5,** agate grey, Ø 75 mm For fixing insulating duct ÜR 5 to the vehicle wall	
	30620-00	**Exhaust duct support AST** Ensures the exhaust duct can be fitted in a rising position in difficult installation conditions	

Accessories for Trumatic S			
Product	**Part no.**	**Description**	
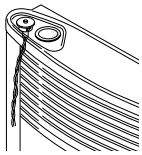	30040-65400	**Ignition pilot light** for retrofitting in the front case of Trumatic S 3002 or Trumatic S 5002 heaters (only for devices **from date of manufacture 08/99** or with a new automatic ignitor – with one battery)	
	30040-65700	**Automatic ignitor retrofit kit** for Trumatic S 3002 P heaters **from date of manufacture 07/81** complete with an ignition pilot light (not illustrated)	**829200**
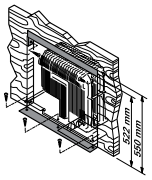	30050-33600	**Installation panel set** for installing a Trumatic S 5002 heater **from date of manufacture 05/98**, replacing a Trumatic S 5002 heater **up to date of manufacture 05/98**	

Modern front case design for older Truma heaters
Retrofit front case for Trumatic S 3002 (P) heaters, **date of manufacture 07/81 to 04/96** complete with control rod and, if necessary, Piezo ignitor. **Attention**: Not to be used with the Trumatic S 3002 K heater!

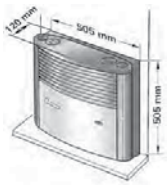	**Front cases** for the Trumatic S 3002 heater	
	30040-19100	**Front case,** sepia brown
	30040-19300	**Front case,** agate grey
	Front cases for the Trumatic S 3002 P heater (incl. Piezo ignitor)	
	30040-19200	**Front case,** sepia brown
	30040-19400	**Front case,** agate grey

If a part has no Grove number against it, we can order from Truma if available

Trumavent fans for Trumatic S

Trumavent fans for Trumatic S

Product	Part no.	Description	Grove No.
Connection for air duct ÜR Ø 65 mm or VR Ø 72 mm	**Trumavent fan TEB-2,** 12 V, with automatic speed control		
	41122-01	**Trumavent fan TEB-2,** 12 V With control panel for installation in the heater case (only for Trumatic S 3002 and Trumatic S 5002 with new design)	**841121**
	41122-02	**Trumavent fan TEB-2,** 12 V With external control panel	**841122**
	Trumavent fan TEN-2, 12 V, with 230 V/12 V transformer and automatic speed control		
	41232-01	**Trumavent fan TEN-2,** 12 V With control panel for installation in the heater case (only for Trumatic S 3002 and Trumatic S 5002 with new design)	
	41232-02	**Trumavent fan TEN-2,** 12 V With external control panel	
CE	41222-01	**Trumavent fan TN-2,** 230 V With external control panel	**841222**

		TEB-2 (12 V)	TN-2 (230 V)
Power consumption		0.3 – 1 A (4 – 13 W)	0.5 A (65 W)
Air flow rate with air duct	ÜR Ø 65 mm	135 m³/h	169 m³/h
	VR Ø 72 mm	142 m³/h	182 m³/h

For details of accessories for external control panels, see page 142.

	40000-47700	**Transformer SPU,** 230 V/12 V For connecting Trumavent fan TEB-2 to a 230 V supply Input 230 V, 50 Hz, 30 W Output 12 V, max. 1.5 A	

Multivent fan TBM

For warm air distribution at the Trumatic S 2200 heater, for increasing the air output in existing warm air systems and acting as an extractor fan in the kitchen or bathroom (in conjunction with air intake nozzle DM).

Product	Part no.	Description	Grove No.
	41141-01	**Multivent fan TBM,** 12 V Universal fan	**841140**

Dimensions in mm	L 150 x W 130 x H 124	
Air flow rate	Partial load	29 m³/h
	Full load	60 m³/h
Power consumption	Partial load	0.23 A
	Full load	0.5 A

For details of accessories for control panels, see page 142.

	40670-00	**Air intake nozzle DM** For connecting Multivent to the heater rear panel or installation box (suitable for duct ÜR, Ø 65 mm)	**840670**
	30630-02	**Cowl AKR** For extractor fan (with rain protection)	

Comfort kit with Airmix

	40621-01	**Comfort kit AXK-2** compl. with Airmix for Trumavent fan with date of manufacture as of 05/96 Not for motor homes or for heaters with under-floor exhaust duct; not for Truma S 55 T heater	

If a part has no Grove number against it, we can order from Truma if available

Trumavent TEN, TBM, TN2, TEB2

Trumavent TEN, TBM, TN2, TEB2

REF	PART NO	DESCRIPTION	GROVE PT NO
TEN - AFTER 05/78			
TEN - AFTER 05/78			
1	40000-00100	CONTROL KNOB	**800100**
2	40000-00200	CONTROL PANEL TEN + CONNECTION CABLE	
5	40000-27900	SPLIT POLE MOTOR 230V COMPLETE	**827900**
12	40000-11200	FAN WHEEL	
TN2 - AFTER 05/96			
1	40000-17200	CONTROL PANEL TN + CONNECTION CABLE	**S40047**
2	40000-00100	CONTROL KNOB	**800100**
7	40000-27900	SPLIT POLE MOTOR 230V COMPLETE	**827900**
13	40000-00900	RESISTOR COMPLETE WITH HOLDING PLATE	
18	40000-42700	FAN WHEEL	
19	40000-43300	Y PIECE COMPLETE	
TBM - AFTER 03/83			
1	40010-00100	CONTROL PANEL	
5	40000-14300	D.C. MOTOR 12V	**814300**
6	39010-17400	CARBON BRUSH SET RED/BLACK UNTIL 02/94	
6	40000-28800	CARBON BRUSH SET WHITE/BLACK AFTER 02/94	**828800**
TEB2 - AFTER 05/96			
1	40000-48000	CONTROL PANEL TEB2 (EXTERNAL FITTING + 1.5 MTR CABLE)	
2	40000-00100	CONTROL KNOB	**800100**
3	40000-46000	CONTROL PANEL TEB2 (FOR FITTING IN HEATER FRONT CASE S3002/P/K AFTER 05/96 WITHOUT CABLE)	**846000**
4	40000-45000	CABLE FOR CONTROL PANEL,800MM LONG	**845000**
7	40000-45900	POWER ELECTRONICS TEB2 40000-57100	**857100**
11	40000-42400	D.C.MOTOR 12V (COMPLETE WITH FAN WHEEL, CONNECTION AND PLUG - BEFORE 12/98)	**842400**
11	40000-42000	D.C. MOTOR 12V (AFTER 01/99)	**842000**
11	40000-42500	FAN WHEEL TEB2 (AFTER 01/99)	
12	40000-28800	CARBON BRUSH SET WHITE/BLACK	**828800**
15	40000-43300	Y PIECE COMPLET	

TN2

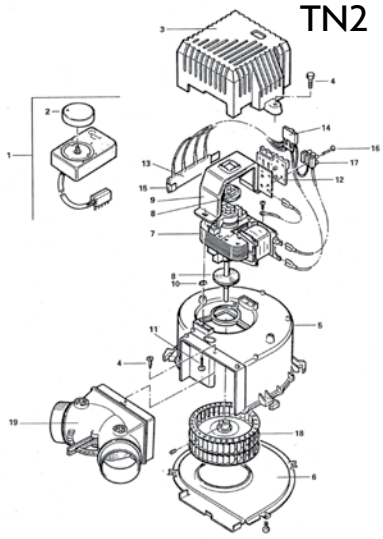

TEB2

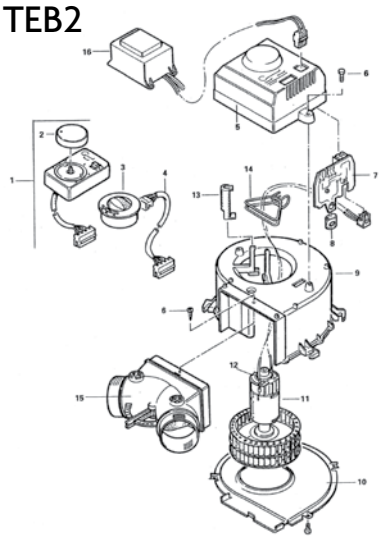

Trumavent TN, TN1, TEB, TEB1

REF	PART NO	DESCRIPTION	GROVE PT NO
TN - EFFECTIVE 07/78 TO 08/85			
1	40000-00100	CONTROL KNOB	**800100**
2	40000-00300	NO LONGER AVAILABLE	
5	40000-27900	SPLIT POLE MOTOR 230V COMPLETE	**827900**
11	40000-11200	FAN WHEEL	
TEB - EFFECTIVE 07/78 TO 12/85			
1	40000-00100	CONTROL KNOB	**800100**
2	40000-00400	CONTROL PANEL TEB + CONNECTION CABLE	
3	40000-13900	THERMO SENSING DEVICE TEB	
8	40000-14300	D.C. MOTOR 12V	**814300**
	39010-17400	CARBON BRUSH SET - RED/BLACK (UNTIL 02/94)	
	40000-28800	CARBON BRUSH SET - WHITE/BLACK (AFTER 02/94)	**828800**
15	40000-13800	FAN WHEEL	
TN1 - AFTER 09/85			
1	40000-00100	CONTROL KNOB	**800100**
2	40000-17200	CONTROL PANEL TN1 + CONNECTION CABLE	**S40047**
7	40000-27900	SPLIT -POLE MOTOR 230V COMPLETE	**827900**
12	40000-00900	RESISTOR COMPLETE WITH HOLDING PLATE	
16	40000-11200	FAN WHEEL	
TEB1 - AFTER 01/86			
1	40000-00100	CONTROL KNOB	**800100**
2	40000-19200	CONTROL PANEL TEB1 + CONNECTION CABLE	**819200**
7	40000-14300	D.C. MOTOR 12V	**814300**
	39010-17400	CARBON BRUSH SET - RED/BLACK (UNTIL 02/94)	
	40000-28800	CARBON BRUSH SET - WHITE/BLACK (AFTER 02/94)	**828800**
16	40000-13800	FAN WHEEL	
17	40000-17100	THERMO SENSING DEVICE	

TEB

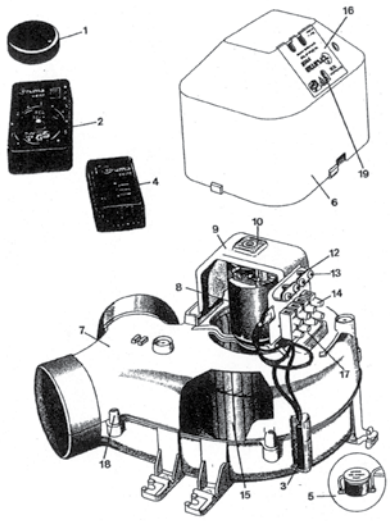

TEB1

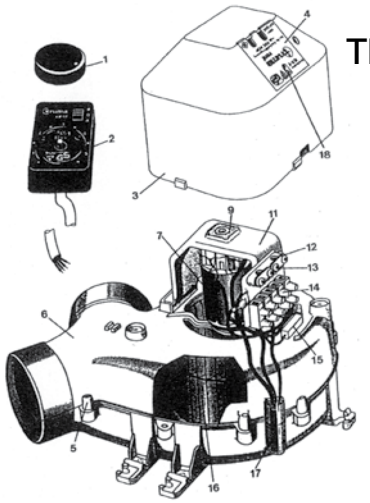

If a part has no Grove number against it, we can order from Truma if available

Truma Ultraheat

Ultraheat additional electric heater

Grove No.

Additional electric heater with thermostat, compl. with control panel and 3 m cable. Suitable for Trumatic S 3002 (P) heaters **with date of manufacture as of 07/81**, Trumatic S 5002 heaters **with date of manufacture as of 04/98** (with semi-circular case design) and Truma S 55 T heaters. Installation between the installation box and heat exchanger.
Not for Trumatic S 3002 K, S 5002 K and S 5002 **with date of manufacture up to 04/98 and with old case design**.

Product	Part no.	Description		
CE	30402-02	**Ultraheat additional electric heater** (not suitable for Truma S 55 T heater)		**830401**
	30402-09	**Ultraheat additional electric heater** (for Truma S 55 T heater only)		

Power consumption with power setting	500 W: 2.2 A 1000 W: 4.5 A 2000 W: 8.5 A
Power supply	230 V ~ 50 Hz
Weight	2 kg

Ultraheat accessories

	34300-01	**Extension cable,** 5 m, For control panel (not illustrated)		**834301**

For details of accessories for control panels, see page 142.

	34201-01	**Room temperature sensor FFC 2,** compl. with 4 m cable and adapter cable, monitors the room temperature regardless of the position of the control panel		**834200**

Ultraheat for S 3002 / S 5002

REF	PART NO	DESCRIPTION	GROVE PT NO
01	30030-98600	CONTROL ULTRAHEAT (CONTIN.) WITHOUT CABLE - UNTIL 04/02	
02	10010-78900	SCREW B 2.9 X 25	
03	39010-84000	CONTROL KNOB COMPLETE	
04	30030-98500	CONTROL ULTRAHEAT (GB) – ORDER ONLY BY TRUMA UK	**S40231**
		(SPECIAL VERSION ENGLAND) WITHOUT CABLE	**898500**
05	10010-11200	SCREW M 3.5 X 25	
06	30030-96900	SCREW COVER	
07	30030-97700	CONTROL KNOB	**897700**
08	30030-98400	CONTROL PANEL (NEW) ULTRAHEAT WITHOUT CABLE - FROM 05/02	**898400**
09	34000-60600	COVER FRAME AGATE GREY – FOR CONTROL PANEL FROM 05/02	
		FURTHER COLOURS UPON REQUEST	**860600**
10	34000-09400	CABLE FOR CON. PANEL 5 M	**809400**
10	34000-09300	CABLE FOR CON. PANEL 3 M	**809300**
11	30030-70900	ELECTRONIC – CONFORM TO EN298/2003 AND LEAD FREE	**869300**
12	30030-69200	ELECTRONIC HOUSING UPPER PART	
13	30030-69100	ELECTRONIC HOUSING BOTTOM PART	
14	10010-40500	PT SCREW KAL 40 X 16	
15	10010-40400	PT SCREW KB 40 X 10	
16	34010-04900	POWER SUPPLY LINE 1.6 M	
17	30030-68900	STRAIN RELIEF	
18	30030-70100	HEATING ELEMENT COMPLETE	**870100**
19	30030-95700	FASTENING PLATE	
20	10010-73800	SCREW B 3.5 X 9.5	
21	30030-65100	TEMPERATURE CONTROL DEVICE 125°	**865100**
22	30030-65200	TEMPERATURE LIMITER 175° (NUR FÜR S 3002 / S 5002)	**865200**
23	10010-70000	SCREW B 2.9 X 6.5 TORX	
24	30030-69800	COVER	
25	30030-94400	DOUBLE CABLE GREEN/YELLOW	
26	30030-94200	CABLE 200 MM BLUE	
27	30030-94300	CABLE 185 MM BLACK	
28	30030-68700	CABLE BUSHING	
29	30030-69600	RADIANT REFLECTOR- ONLY FOR S 3002 / S 5002	

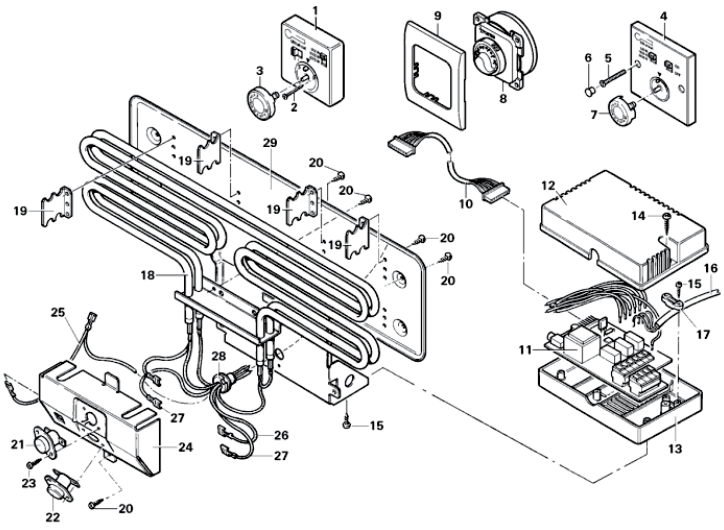

Trumatic E2400

Trumatic E 2400 LP gas heater

Grove No.

Heater compl. with thermostat, control panel with 4 m cable and mounting kit, without exhaust duct. Versions for natural gas (CNG) plus variants with 10 m control panel cable, 24 V or special control panel for installation in existing cut-outs available on request.

Product	Part no.	Description	
	37112-01	**Trumatic E 2400**, 30 mbar, 12 V	837110

Technical details

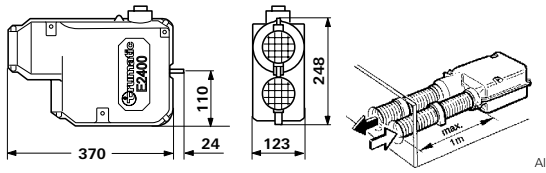

All dimensions in mm

Rated thermal output	2400 W (propane/butane)
Air flow rate	Approx. 49/78 m3/h
Gas consumption	(Propane/butane); partial load 100 g/h, full load 200 g/h
Power consumption (12 V)	0.6/1.1 A
Rest current	0.01 A
Weight	(Without/with peripheral devices) 4.8/5.1 kg
Product ID number	CE-0085AO0008

Exhaust duct accessories

Cowl kits and single cowl parts

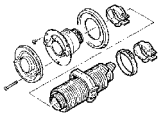

Wall cowl kit EW 24 (without cover), compl. with 1 m exhaust duct, 1 m air supply duct and clips

39371-01	**Wall cowl kit EW 24,** cream	839370
39371-04	**Wall cowl kit EW 24,** bianco	
39371-03	**Wall cowl kit EW 24,** black	

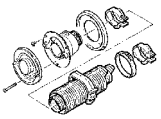

Wall cowl kit EAW 24 (without cover) for heaters installed externally, compl. with 0.5 m exhaust and air supply duct, clips and air lead-through

39371-02	**Wall cowl kit EAW 24,** cream
39371-05	**Wall cowl kit EAW 24,** bianco
39371-06	**Wall cowl kit EAW 24,** black

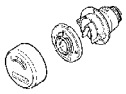

Cowl cover KKW for wall cowls with **date of manufacture up to 03/2001**

39140-00	**Cowl cover KKW,** cream
39140-02	**Cowl cover KKW,** bianco
39140-01	**Cowl cover KKW,** black

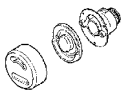

Cowl cover KKW-2 for wall cowls with **date of manufacture as of 03/2001**

39141-00	**Cowl cover KKW-2,** cream	839142
39141-02	**Cowl cover KKW-2,** bianco	
39141-01	**Cowl cover KKW-2,** black	

If a part has no Grove number against it, we can order from Truma if available

Trumatic E2400

Single cowl parts			Grove No.
Product	Part no.	Description	
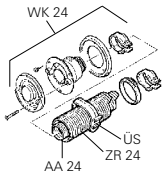	**Wall cowl WK 24** (without ducts)		
	39381-01	**Wall cowl WK 24,** cream	
	39381-06	**Wall cowl WK 24,** bianco	
	39381-03	**Wall cowl WK 24,** black	
	39420-00	**Exhaust duct AA 24,** Ø 33 mm (per metre)	**839420**
	39440-00	**Air supply duct ZR 24,** Ø 64 mm (per metre)	
	40241-01	**Clip ÜS,** agate grey, Ø 65 mm	
Warm air distribution parts			
	39450-00	**Duct VR 80,** Ø 80 mm outer, Ø 76 mm inner (per metre)	**839580**
	39590-00	**Clip ZRS,** Ø 80 mm	**839590**
	39490-00	**Elbow BG 80** For Ø 80 mm ducts	
	39610-00	**Y-pipe 80,** Inlet Ø 80 mm, Outlet 2x Ø 65/72 mm	**839610**
	39540-00	**T-pipe 80,** Inlet Ø 80 mm, Outlet 2x Ø 65/72 mm	
	39500-01	**Air diffuser LR 80,** Inlet Ø 80 mm, Outlet 2x Ø 65/72 mm and 1x Ø 49 mm	
Air lead-through for Trumatic E 2400 heater installed externally			
Product	Part no.	Description	
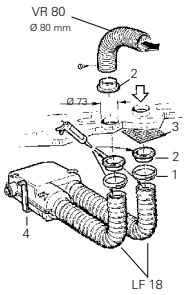	39080-16900	**Air duct LF 18,** Inner diameter 76 mm (Fixed length 60 cm)	
	39010-61800	**Hose clip,** 70 – 90 (1)	
	39050-73400	**Connector piece** (2) For ducts with inner diameter of 76 mm	
	39080-15900	**Protection grill** (3)	
	39050-74000	**Fastening strap** (4) (not illustrated)	

The way in which warm air will be distributed is designed for each individual type of vehicle.

If a part has no Grove number against it, we can order from Truma if available

Trumatic E2400

Air lead-through for Trumatic E 2400 heater installed externally			Grove No.
Product	Part no.	Description	
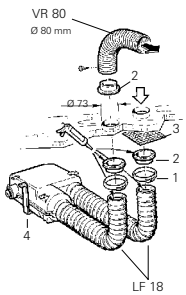	39080-16900	**Air duct LF 18,** Inner diameter 76 mm (Fixed length 60 cm)	
	39010-61800	**Hose clip,** 70 – 90 (1)	
	39050-73400	**Connector piece** (2) For ducts with inner diameter of 76 mm	
	39080-15900	**Protection grill** (3)	
	39050-74000	**Fastening strap** (4) (not illustrated)	
The way in which warm air will be distributed is designed for each individual type of vehicle.			
Trumatic E electrical accessories			
	39891-00	**Time switch ZUE 2,** 12/24 V, Compl. with cover frame and 4 m cable	
	39010-78300	**Extension cable,** 4 m, For ZUE 2 (not illustrated)	
	Remote sensor compl. with cable, for monitoring the room temperature regardless of the position of the control panel		
	39010-77300	**Remote sensor FF** With 4 m cable	**877300**
	39010-77400	**Remote sensor FF 1** With 10 m cable	
	39050-41700	**Remote sensor FF 2** For monitoring the room temperature regardless of the position of the control panel (not suitable for use in loading compartments); please order cable along with this	
	34000-71900	**Cable** 4 m For remote sensor FF 2 (not illustrated)	
Trumatic E electrical accessories			
Product	Part no.	Description	
	Extension cable for remote sensor FF 2 (not illustrated)		
	39010-78300	**Extension cable,** 4 m (not illustrated)	
	39010-78400	**Extension cable,** 10 m (not illustrated)	
	39010-78200	**Multiple plug adapter MSD** With 0.3 m connecting cable for connecting multiple accessories (e.g. time switch and remote sensor)	
	Special control panel for installation in existing cut-outs (e.g. instrument panel), compl. with thermostat, cable and installation frame		
	39050-39000	**Special control panel** With 4 m cable	
	39050-38900	**Special control panel** With 10 m cable	

If a part has no Grove number against it, we can order from Truma if available

Trumatic E4000/E 4000 A

Trumatic E 4000/E 4000 A LP gas heater

Grove No.

Heater compl. with thermostat, control panel with 4 m cable and mounting kit, without exhaust duct. Versions with 10 m control panel cable, 24 V or special control panel for installation in existing cut-outs available on request.

Product	Part no.	Description	
	32312-01	**Trumatic E 4000,** 30 mbar, 12 V	
	32492-01	**Trumatic E 4000 A,** 30 mbar, 12 V, For external installation	

Technical details

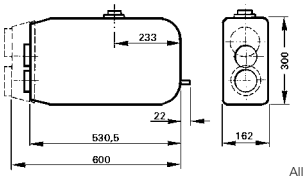

All dimensions in mm

Rated thermal output	3700 W
Air flow rate	Approx. 70/102 m3/h
Gas consumption	Partial load 150 g/h, full load 310 g/h
Power consumption (12 V)	1.0/2.3 A
Rest current	0.01 A
Weight (without/with peripheral devices)	E 4000 (E 4000 A) 8.6 (9.0)/8.9 (9.3) kg
Product ID number	CE-0085AP0232

For details of accessories for control panels, see page 142. For details of window switch and automatic shut-off equipment (if the exhaust cowl is installed below or beside a window), see page 51.

Air lead-through for heater E 4000 A installed externally

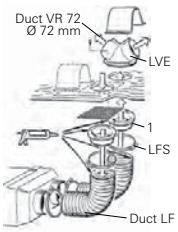	39760-00	**Duct LF,** Ø 106 mm (per metre)	
	39770-00	**Clip LFS,** Ø 106 mm	
	39010-76900	**Exterior socket,** Ø 106 mm (1)	
	39750-00	**Air diffuser LVE** compl. with protection grill and panel Outlet for 2x ducts VR 72, Ø 72 mm	

The way in which warm air will be distributed is designed for each individual type of vehicle.

Warm air distribution parts

	39550-00	**Duct VR 72,** Ø 72 mm (per metre), for direct connection to Trumatic E 4000 heater	
	40261-01	**Clip ÜS 5,** agate grey, Ø 72 mm	
	39570-00	**Duct I 80,** Ø 85 mm (per metre), insulation duct for duct VR 72, e.g. to serve as contact protection for Trumatic E 4000	
	39590-00	**Clip ZRS,** Ø 80 mm	839590

If a part has no Grove number against it, we can order from Truma if available

Trumatic E4000/E 4000 A

Cowl kits and single cowl parts

Product	Part no.	Description		Grove No.
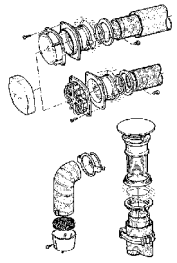	**Wall cowl kit CW** compl. with 1 m exhaust duct, 1 m air supply duct and clips (without cover)			
	34110-01	**Wall cowl kit CW,** cream		**834111**
	34110-02	**Wall cowl kit CW,** bianco		**834112**
	34110-09	**Wall cowl kit CW,** black		
	34110-10	**Wall cowl kit CW,** anthracite		
	Wall cowl WKC compl. (without cover or ducts)			
	34011-01	**Wall cowl WKC,** cream		
	34011-05	**Wall cowl WKC,** bianco		**834015**
	34011-09	**Wall cowl WKC,** black		
	34011-10	**Wall cowl WKC,** anthracite		
	39690-00	**Roof cowl kit ED** compl. with 2 m exhaust duct, 2 m air supply duct, condensation trap and clips		
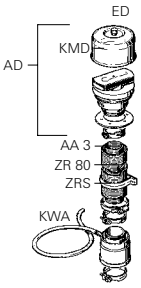	39600-01	**Roof cowl AD** compl. with cover (no ducts)		
	39620-01	**Roof cowl cover KMD** (spare)		
	39670-00	**Condensation trap KWA**		
	39320-00	**Exhaust duct AA 3,** Ø 55 mm (per metre)		
	39580-00	**Air supply duct ZR 80,** Ø 80 mm (per metre)		
	39590-00	**Clip ZRS,** Ø 80 mm		**839590**

Cowl kits and single cowl parts

Product	Part no.	Description	
	39330-01	**Wall cowl cover KW-2,** cream (Spare for devices with date of manufacture up to 03/2005)	
	39511-00	**Cowl housing** For external heaters	

If a part has no Grove number against it, we can order from Truma if available

Truma Combi and Combi E

Combi 4 (E), Combi 6 (E), LP gas and electric heater with water boiler

Heater (excluding exhaust duct) complete with room thermostat, control panel with 3 m cable, mounting parts, current-free FrostControl safety/drain valve and elbow fittings for 10 mm Ø water hoses. Models with water connections for semi-rigid piping (John Guest System) available on request.

Product	Part no.	Description	Grove No.
	33700-01	**Combi 4,** 30 mbar, 12 V,	**833700**
	33710-01	**Combi 4 E,** 30 mbar, 12 V, with electric heater 230 V, 1800 W	**833710**
	33800-01	**Combi 6,** 30 mbar, 12 V	**833800**
	33810-01	**Combi 6 E,** 30 mbar, 12 V, with electric heater 230 V, 1800 W	**833810**

Technical details

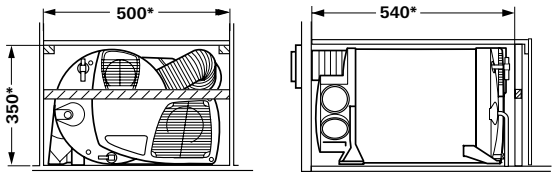

* Minimum installation dimensions in mm (please ensure that there is enough room for installation and servicing work to be carried out)

Time to heat water up from approx. 15°C to approx. 60°C	Approx. 20 min. (boiler), approx. 80 min. (heater + boiler), approx. 45 min. (electrical operation)
Air flow rate	Max. 287 m³/h
Power consumption (12 V) (heater + boiler) (heating up boiler)	Combi 4 Ø 1.1 A (0.2 – 5.6 A), Combi 6 Ø 1.3 A (0.2 – 5.6 A) 0.4 A
Power consumption (230 V)	900 W 3.9 A 1800 W 7.8 A
Rest current	0.001 A
Water capacity	10 litres
Water pressure	Max. 2.8 bar

Weight without water	Combi	Combi E
Without peripherals	14.0 kg	15.1 kg
With peripherals	14.5 kg	15.6 kg
Product ID number	CE-0085BS0085	

	Combi 4		Combi 6		
Burner stage	1	2	1	2	3
Rated thermal output	2000 W	4000 W	2000 W	4000 W	6000 W
Gas consumption	160 g/h	320 g/h	160 g/h	320 g/h	480 g/h

Accessories for Combi and Combi E

Product	Part no.	Description
	34043-01	**Time switch ZUCB** complete with 3 m cable
	34301-03	**Extension cable,** 6 m for time switch ZUCB (not illustrated)
	70070-01	**FrostControl heating element** with 1.5 m cable, for faster filling of the boiler, independent of the room temperature
	34091-01	**Elbow BGC** for direct connection to the warm air outlet (outlet for ducts of 65 or 72 mm Ø)
	34310-01	**Blanking plug VD-Combi** for closing a warm air outlet on the Combi 4 (E)

If a part has no Grove number against it, we can order from Truma if available

Truma Combi and Combi E

Accessories for Combi and Combi E				Grove No.
Product	Part no.	Description		
		Extension cable for Combi and Combi E control panel		
	34301-01	**Extension cable,** 6 m		
	34301-02	**Extension cable,** 3 m		
Cowl kits and single cowl parts, accessories for Trumatic C (EH)				
		Wall cowl kit CW complete with 1 m exhaust duct, 1 m air supply duct and clips (without cover)		
	34110-01	**Wall cowl kit CW,** cream		834111
	34110-02	**Wall cowl kit CW,** bianco		834112
	34110-09	**Wall cowl kit CW,** black		
	34110-10	**Wall cowl kit CW,** anthracite		
Cowl kits and single cowl parts, accessories for Trumatic C (EH)				
Product	Part no.	Description		
		Wall cowl WKC complete (without cover or ducts)		
	34011-01	**Wall cowl WKC,** cream		
	34011-05	**Wall cowl WKC,** bianco		834015
	34011-09	**Wall cowl WKC,** black		
	34011-10	**Wall cowl WKC,** anthracite		
	34080-01	**Cowl lead-through SDDF** for caravan protective double roofs		
Cowl kits and single cowl parts, accessories for Trumatic C (EH)				
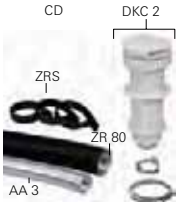	34122-01	**Roof cowl kit CD** complete with 3 m exhaust duct, 3 m air supply duct and clips		
	34051-01	**Roof cowl DKC 2** complete (without ducts)		
	39320-00	**Exhaust duct AA 3,** Ø 55 mm (per metre)		
	39580-00	**Air supply duct ZR 80,** Ø 80 mm (per metre)		
	39590-00	**Clip ZRS,** Ø 80 mm		839590
	34070-01	**Cowl extension KVC,** 30 cm		
	34080-01	**Cowl lead-through SDDF** for caravan protective double roofs		
	34141-01	**Heating collar retrofit kit,** 230 V, for hot water with Trumatic C		834141

If a part has no Grove number against it, we can order from Truma if available

Truma Combi and Combi E

Cowl kits and single cowl parts, accessories for Trumatic C (EH)				Grove No.
Product	Part no.	Description		
	34010-02100	**Extension cable,** 5 m for power selector switch C EH (not illustrated)		
	34300-01	**Extension cable,** 5 m for Trumatic C control panel (not illustrated)		834301
	34042-01	**Time switch ZUC 2** complete with 3 m cable		
	34000-37000 34170-01	**Extension cable,** 5 m for time switch ZUC 2 (not illustrated) **Remote control** for the electrical safety/drain valve from date of manufacture 06/97 complete with 3 m connecting cable		
	34000-86000	**Extension cable,** 5 m for the remote control (not illustrated)		
	34091-01	**Elbow BGC** for direct connection to the warm air outlet (outlet for ducts of 65 or 72 mm Ø)		834090
	40353-01	**Blanking plug VD,** agate grey for closing a warm air outlet on the Trumatic C 4002 or C 3402		801335
	34000-81800	**U-clamp set,** essential when using warm air duct VR 72, Ø 72 mm (not illustrated)		

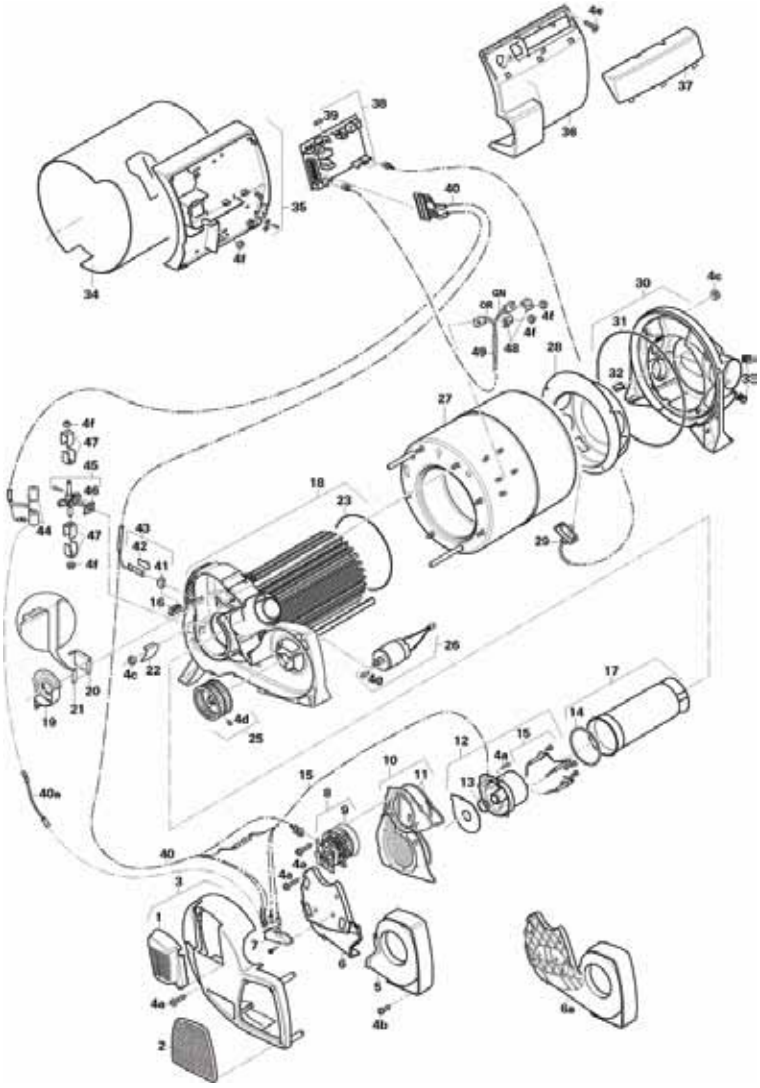

If a part has no Grove number against it, we can order from Truma if available

Truma Warm air distribution

Accessories for warm air distribution				Grove No.
Product	Part no.	Description		
	40210-00	**Branch duct AZR,** Ø 22 mm (per metre)		
	40220-00	**Clip AZS,** Ø 22 mm		
	40151-02	**T-pipe LT,** agate grey For Ø 65 or 72 mm ducts		
	40181-01	**End outlet nut EM,** agate grey		**801325**
	End outlet EN with air throttle, suitable for T-pipe LT, end outlet nut EM and Ø 65 mm ducts			
	40171-01	**End outlet EN,** agate grey		**801321**
	40171-02	**End outlet EN,** beige		**801320**
	40171-03	**End outlet EN,** brown		
	40171-04	**End outlet EN,** grey		
	40171-05	**End outlet EN,** black		
	40171-06	**End outlet EN,** white		
	40171-09	**End outlet EN,** olive brown		
	40171-08	**End outlet EN,** silver		
	Lamella inset LA for attaching to end outlet EN-O, direction of air flow can be adjusted by turning			
	40721-01	**Lamella inset LA,** agate grey		
	40721-02	**Lamella inset LA,** beige		
	40721-03	**Lamella inset LA,** brown		
	40721-04	**Lamella inset LA,** grey		
	40721-05	**Lamella inset LA,** black		
	40721-09	**Lamella inset LA,** olive brown		
	39550-00	**Duct VR 72,** Ø 72 mm (per metre)		**801288**
	40261-01	**Clip ÜS 5,** agate grey, Ø 72 mm		
	39450-00	**Duct VR 80,** Ø 80 mm (per metre)		**839580**
	39590-00	**Clip ZRS,** Ø 80 mm		**839590**
	40681-00	**Insulated duct DRI,** Ø 75 mm, Fixed length 2 m		
	40261-01	**Clip ÜS 5,** agate grey, Ø 72 mm		
	39170-00	**Duct ZR 18,** Ø 49 mm (per metre)		**839170**
	39190-00	**Clip ZRS 18,** Ø 49 mm		

If a part has no Grove number against it, we can order from Truma if available

Truma Warm air distribution

Accessories for warm air distribution				Grove No.
Product	Part no.	Description		
	40171-25	**End outlet EN-L** black For rounded items of furniture and thicker walls (up to a maximum of 43 mm)		
	End outlet EN-O without air throttle, for lamella inset LA			
	40171-07	**End outlet EN-O,** agate grey		
	40171-29	**End outlet EN-O,** olive brown		
	40101-01	**Panel BL 22,** agate grey With Ø 22 mm air outlet, can be used to achieve a significant reduction in the air flow volume		
	40101-02	**Panel BL 30,** agate grey With Ø 30 mm air outlet, can be used to achieve a slight reduction in the air flow volume		
	Swivelling air outlet SCW 2 non-closable air outlet for Trumatic E, Trumatic C and Combi (D), for Ø 80 mm, 72 mm or 65 mm ducts			
	39971-01	**Swivelling air outlet SCW 2,** black		839971
	39971-02	**Swivelling air outlet SCW 2,** beige		839972
	39971-03	**Swivelling air outlet SCW 2,** basalt grey		
	40151-01	**T-pipe TS,** agate grey For Ø 65 or 72 mm ducts		801328
	34020-24000	**Clips,** 3x for T-pipe TS, T-pipe LT, insulating elbow BGI and Combi for improved securing of different air ducts (not illustrated)		
	40701-01	**Wall outlet vent WL,** agate grey For Ø 65 or 72 mm ducts		840700
	40191-01	**Y-pipe,** agate grey For Ø 65 or 72 mm ducts		
	39010-76400	**Elbow BG,** black For Ø 65 or 72 mm ducts		876400
	40730-01	**Insulating elbow BGI,** black Insulated elbow for guiding air underneath the floor and back again (2 pieces required)		
	40301-01	**Branch AB35,** agate grey For Isotherm system, for Ø 65 mm ducts, Ø 35 mm branch		
	40320-00	**Isotherm duct IR,** Ø 35 mm, perforated (per metre)		840320
	40320-01	**Isotherm duct IR,** Ø 35 mm, not perforated (per metre – not illustrated)		
	40340-00	**Double clip DS** For Isotherm duct, Ø 35 mm, and duct ÜR, Ø 65 mm		
	40331-01	**Clip IS,** agate grey For Isotherm duct, Ø 35 mm		840330
	40311-01	**Corner air outlet EC,** agate grey For Isotherm duct, Ø 35 mm		

If a part has no Grove number against it, we can order from Truma if available

Truma Warm air distribution

Accessories for warm air distribution

Product	Part no.	Description		Grove No.
		Duct shut-off for central closing of an air lead-through for Ø 65 mm or 72 mm ducts		
	40121-01	**Duct shut-off SP,** agate grey		
	40121-02	**Duct shut-off SP 2,** agate grey With Bowden cable and control slide for installation on a wardrobe wall		
	40161-01	**Straight coupling ÜM,** agate grey For Ø 65 or 72 mm ducts		**840160**
	40131-01	**T-branch AT,** agate grey For Ø 65 or 72 mm ducts, For Ø 65 mm or 72 mm ducts, Ø 22 mm branch with end grommet for duct, e.g. for refrigerator ventilation in summer		**840130**
	40391-01	**Duct cover RD,** agate grey For Ø 65 or 72 mm ducts		
	40353-01	**Blanking plug VD,** agate grey For closing form parts		**801335**
	39010-81300	**Reducer RZ,** black For reducing Ø 72 mm ducts to Ø 49 mm		**881300**
	40381-01	**Reducer RZ35,** agate grey For reducing Ø 65 mm or 72 mm ducts to Ø 35 mm Isotherm ducts		
	40640-00	**Duct casing RA,** length 65 cm 2 brackets incl. (without air outlet)		
	40660-00	**Air intake nozzle DT,** Ø 80 mm For fan connection in special cases		**840660**

Towel dryer

Warm air from the existing Truma heater is routed into the two swivelling support tubes of the towel dryer

	40500-01	**Towel dryer,** titanium silver, Incl. installation accessories	
		Dimensions in cm	L 76 x W 42 x H 8
		Weight	0.7 kg

Awning Warmer

Awning Warmer in new design; for guiding the warm air from the existing caravan heater directly into the awning, consisting of:
Warm air outlet with cover, 1 m duct, Ø 65 mm, T-pipe TS and duct shut-off SP 2

	40371-02	**Awning Warmer,** ivory		**840360**
	40371-01	**Awning Warmer,** white		**840365**

If a part has no Grove number against it, we can order from Truma if available

Truma Electroboiler

Electroboiler

Product	Part no.	Description	Grove No.
	71200-01	**Electroboiler** complete with control panel with 3 m cable and safety/drain valve for 14 litres, with electrical heating element 230 V, 850 W	**871200**
	For details of accessories for control panels, see page 142. For details of accessories for the water system, see page 140.		

Technical details

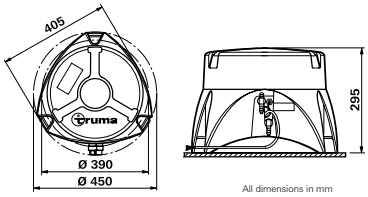

All dimensions in mm

Heating time from approx. 15°C to approx. 70°C	Approx. 70 min.
Water capacity	14 litres
Water pressure	Max. 2.8 bar
Water connections	Pressure-tight hot water hoses Ø 10 mm
Power consumption (230 V)	3.7 A
Weight (without water)	3 kg

Accessories

Electroboiler accessories

Safety/drain valve ABO may also be needed in some installation situations

	70141-02	**Safety/drain valve ABO,** 2.8 bar, for flexible hoses Ø 10 mm		**814102**
	70142-05	**Safety/drain valve ABO,** 2.8 bar, with Ø 12 mm connection for semi-rigid piping (John Guest System)		**870145**
	34020-80200	**FrostControl** connector for flexible water hose		**834101**
	34020-80300	**FrostControl** John Guest System		

If a part has no Grove number against it, we can order from Truma if available

Truma Ultrastore

Boiler (EL)

Product	Part no.	Description	Grove No.
		Boiler with cowl cover KBS 3, control panel with 3 m cable, wall cowl and safety/drain valve.	
	73000-01	**Boiler B 10,** 10 litre, 30 mbar	**871512**
B	73000-21	**Boiler B 10 EL,** 10 litre, 30 mbar, with electrical heating element 230 V, 850 W	**871552**
B EL	73010-01	**Boiler B 14,** 14 litre, 30 mbar	**871612**
	73010-21	**Boiler B 14 EL,** 14 litre, 30 mbar, with electrical heating element 230 V, 850 W	**871632**

Technical details

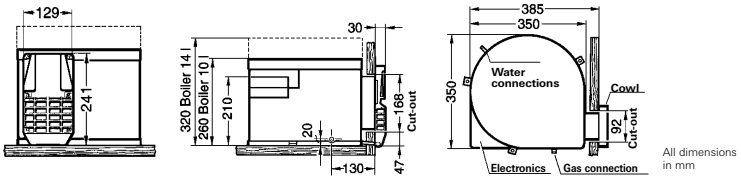

Water connections	Pressure-tight hot water hoses, Ø 10 mm		
Gas consumption	120 g/h		
Power consumption (12 V)	Ignition 0.17 A	0.17 A	
	Heating up 0.08 A	0.08 A	
	Standby 0.04 A	0.04 A	
(230 V/850 W)		3.7 A	
Weight (without water)	Boiler B 10 EL	6.7 kg	
	Boiler B 14 EL	7.3 kg	
Product ID number	CE-0085AP0038		

Heating time*	Gas operation	Electrical operation	Gas and electrical
For 10 l water	Approx. 34 min.	Approx. 45 min.	Approx. 25 min.
For 14 l water	Approx. 50 min.	Approx. 72 min.	Approx. 38 min.

* From approx. 15°C to approx. 70°C

Installation accessories

Product	Part no.	Description		Grove No.
	70000-53500	**Cable extension 5 m** for control panel (not illustrated)		**853500**
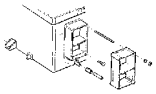	70131-00	**Cowl extension VBO 2,** length 50 mm (required for walls thicker than 35 mm)		**870131**
	70121-01	**Cowl cover KBS 2,** cream, for Truma boiler series 2 + 3 date of manufacture 01/1992 to 06/2006		**870121**
	70122-01	**Cowl cover KBS 3,** white, for Truma boilers from date of manufacture 07/2006		**870122**

If a part has no Grove number against it, we can order from Truma if available

Truma Ultrastore

Accessories for the water system				Grove No.
	70111-01	**Water hose Ø 10 mm,** blue, drinking water compatible (per metre)		
	70000-27900	**Hose clip 12 – 20 mm**		801024
	40712-01	**Hose clip SC,** agate grey, for securing up to two water hoses or pipes (John Guest System, protected against frost) on the warm air distribution ducts (not on the first 2 m of the warm air duct, measured from the heater).		
	70020-55800	**Hose guide** for kink-free routing of flexible water hoses		
	70000-03300	**Non-return valve** for flexible hoses Ø 10 mm (essential extra for immersion pumps)		803300
	70020-03500	**Non-return valve** with Ø 12 mm connection for semi-rigid piping (John Guest System)		803400

Truma Therme

Truma Therme				
Product	Part no.	Description		
	42013-01	**Therme TT-2,** complete with control panel, drain valve and breather valve (without mixing valve)		842012

Heating time (electrical operation) from approx. 15°C to approx. 60°C	Approx. 50 min.
Power supply	230 V ~, 50 Hz
Power consumption	1.3 A (300 W)
Temperature limit	65°C
Dimensions in cm	L 37 x W 22 x H 23
Water capacity	5 litres
Operating pressure	Max. 1.2 bar
Weight (without water)	2 kg

For details of accessories for control panels, see page 142.
For details of accessories for the water system, see page 140.

Accessories

Therme accessories				
	40020-00900	**Drain valve** with double connection		800400
	40020-00300	**Mixing valve** for Truma Therme		
	70141-10	**Safety/drain valve ABO,** 1.5 bar, essential when connecting the Truma Therme to a central water supply (city mains)		

If a part has no Grove number against it, we can order from Truma if available

Boiler - Series 2 Boiler 30 + 50mbar from February 1992 to July 1993

REF	PART NO	DESCRIPTION	GROVE PT NO
1	70000-14000	CLAMPING RING	
2	70020-60500	STEEL WATER CONTAINER 10LTR (INC BLIND FLANGE)	**861000**
2	70000-61100	STEEL WATER CONTAINER 14LTR (INC BLIND FLANGE)	
3	70000-14100	RUBBER SEALING RING	
4	70000-13300	FORM RING	
7	70000-36300	ORIEL COMPLETE WITH SILICON SEALING RING	
8	70000-29100	PROFILED GASKET 140MM LONG	
9	70000-37200	SILICON SQUARE GASKET	
20	70000-36900	ELECTRONIC UNIT 50MBAR COMPLETE	
21	70000-28900	FUSE 1.25 AF (FOR BOILER 50MBAR)	**828900**
20	70000-38300	ELECTRONIC UNIT 30MBAR COMPLETE	
21	39010-10900	FUSE 1.25 AF (FOR BOILER 30MBAR)	
22	70000-57900	CONTROL PANEL COMPLETE WITH 2.5M CABLE	
23	40000-00100	CONTROL KNOB COMPLETE	**800100**
24	70000-54100	WALL COWL COMPLETE	
25	70000-54500	GRILL FOR WALL COWL (COMPLETE WITH FLOOR PLATE)	
26	70121-01	COWL COVER KBS 2	**870121**
28	10010-50200	SCREW AM 4 X 12	
29	70000-12800	PROTECTION CAP	
32	70141-01	SAFETY/DRAINING VALVE ABO COMP. 2BAR (LEVER = RED)	
32	70141-02	SAFETY/DRAINING VALVE ABO COMP 3.5BAR (LEVER = YELLOW)	**814102**
34	70000-03300	NON RETURN VALVE	**803300**
35	70000-37700	CABLE HARNESS COMPLETE	
36	70000-26400	CONNECTION CLAMP BLUE/ORANGE	
37	70000-38000	DOUBLE SPARK ELECTRODE COMPLETE	
40	70000-54200	BURNER	**854200**
41	70000-56200	FLAME RECTIFICATION ELECTRODE	**856200**
44	70000-36500	VALVE BODY 50MBAR COMPLETE WITH GASKET	
44	70000-38200	VALVE BODY 30MBAR COMPLETE WITH GASKET	**838200**
45	10030-17700	O RING 5.5 X 1.5 (FOR VALVE BODY UNTIL JULY 1993)	
	70000-35800	GASKET FOR VALVE BODY (FROM JULY 1993) NOT SHOWN	
50	70131-00	COWL EXTENSION VBO 2	**870131**
53	70000-30000	THERMOSTAT SENSORCOMPLETE	**830000**
57	70000-18100	MAINS CONNECTION	
58		CONTROL PANEL BN CPL (NOT AVAILABLE,SPARE POS 60)	
60	70000-01600	CONTROL PANEL BN CPL (ELECTRIC HEATING 230V)	**801600**
62	10030-24000	O RING 30 X 3	
63	70000-02500	HEATING ELEMENT 230V COMPLETE	**802500**
	70110-00	WATER TUBE 3.5BAR (PER METRE - NOT ILLUSTRATED)	

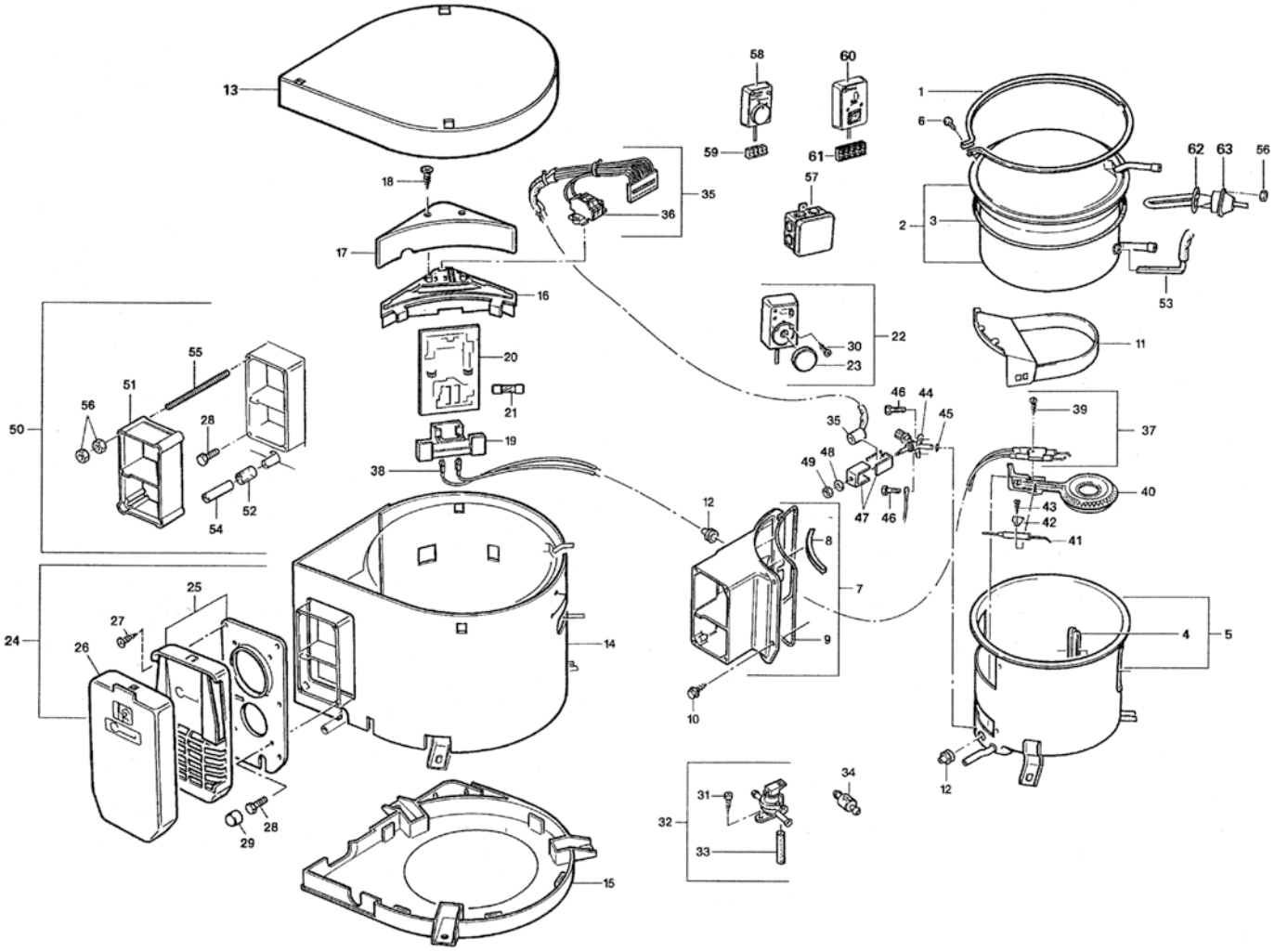

If a part has no Grove number against it, we can order from Truma if available

Truma Boiler - Series 3 / Ultrastore

Boiler 30 + 50mbar from July 1993, Ultrastore 30mbar from July 1998

REF	PART NO	DESCRIPTION	GROVE PT NO
1	70000-14000	CLAMPING RING	
2	70020-60500	STEEL WATER CONTAINER 10LTR (INC BLIND FLANGE)	**861000**
2	70000-61100	STEEL WATER CONTAINER 14LTR (INC BLIND FLANGE)	
3	70000-14100	RUBBER SEALING RING	
4	70000-13300	FORM RING	
7	70000-36300	ORIEL COMPLETE WITH SILICON SEALING RING	
8	70000-29100	PROFILED GASKET 140MM LONG	
9	70000-37200	SILICON SQUARE GASKET	
20	70000-99500	ELECTRONIC UNIT 30 + 50MBAR COMPLETE	**899500**
21	70000-28900	FUSE 1.25 AT	**828900**
22	70000-57900	CONTROL PANEL C/W 2.5MTR CABLE	
23	40000-00100	CONTROL KNOB	**800100**
25	70000-96500	CONTROL PANEL (WITHOUT CABLE - SPECIAL VERSION GB)	
28	70000-99400	CONTROL KNOB	**899400**
29	70000-96200	CABLE 3MTR FOR CONTROL PANEL	**896200**
30	70000-54100	WALL COWL COMPLETE	
31	70000-43900	COWL WALL PLATE	
32	70000-43200	GRILL FOR WALL COWL	**843200**
33	70121-01	COWL COVER KBS 2	**870121**
38	70141-01	SAFETY/DRAINING VALVE ABO CPL. 2BAR (LEVER = RED)	
38	70141-02	SAFETY/DRAINING VALVE ABO CPL. 3.5BAR (LEVER + YELLOW)	**814102**
40	70000-03300	NON RETURN VALVE	**803300**
41	70000-56300	CABLE HARNESS COMPLETE	**856300**
42	70000-26400	CONNECTION CLAMP BLUE/ORANGE	
43	34000-34200	THERMOSTAT OVER TEMPERATURE	**834201**
44	34000-34300	THEROSTAT SENSING DEVICE	**834300**
49	70000-38000	DOUBLE SPARK ELECTRODE COMPLETE	
52	70000-54200	BURNER	**854200**
53	70000-56200	FLAME RECTIFICATION ELECTRODE COMPLETE	**856200**
56	70000-36500	VALVE BODY 30 MBAR COMPLETE WITH GASKET	
56	70000-38200	VALVE BODY 50 MBAR COMPLETE WITH GASKET	**838200**
57	70000-35800	GASKET FOR VALVE BODY	
62	70131-00	COWL EXTENSION VBO 2	**870131**
68	70000-18100	MAINS CONNECTION	
69		CONTROL PANEL BN CPL (NOT AVAILABLE,SPARE POS 71)	
71	70000-01600	CONTROL PANEL BN CPL (ELECTRIC HEATING 230V)	**801600**
73	10030-24000	O RING 30 X 3	
74	70000-02500	HEATING ELEMENT 230V 450W	**802500**
	70010-03000	HEATING ELEMENT 230V 850W	**802501**
	70110-00	WATER TUBE 3.5BAR (PER METRE - NOT ILLUSTRATED)	
	70122-01	COWL COVER NEW TYPE (2 LUGS)	**870122** WHITE
	70122-03	COWL COVER NEW TYPE (2 LUGS)	**870123** IVORY
	70020-07000	GRILL NEW TYPE (2 LUGS)	**807000** WHITE
	70020-07200	GRILL NEW TYPE (2 LUGS)	**807200** IVORY
	70020-57500	COWL ASSY COMPLETE NEW TYPE (2 LUGS)	**857500** WHITE
	70020-57700	COWL ASSY COMPLETE NEW TYPE (2 LUGS)	**857700** IVORY

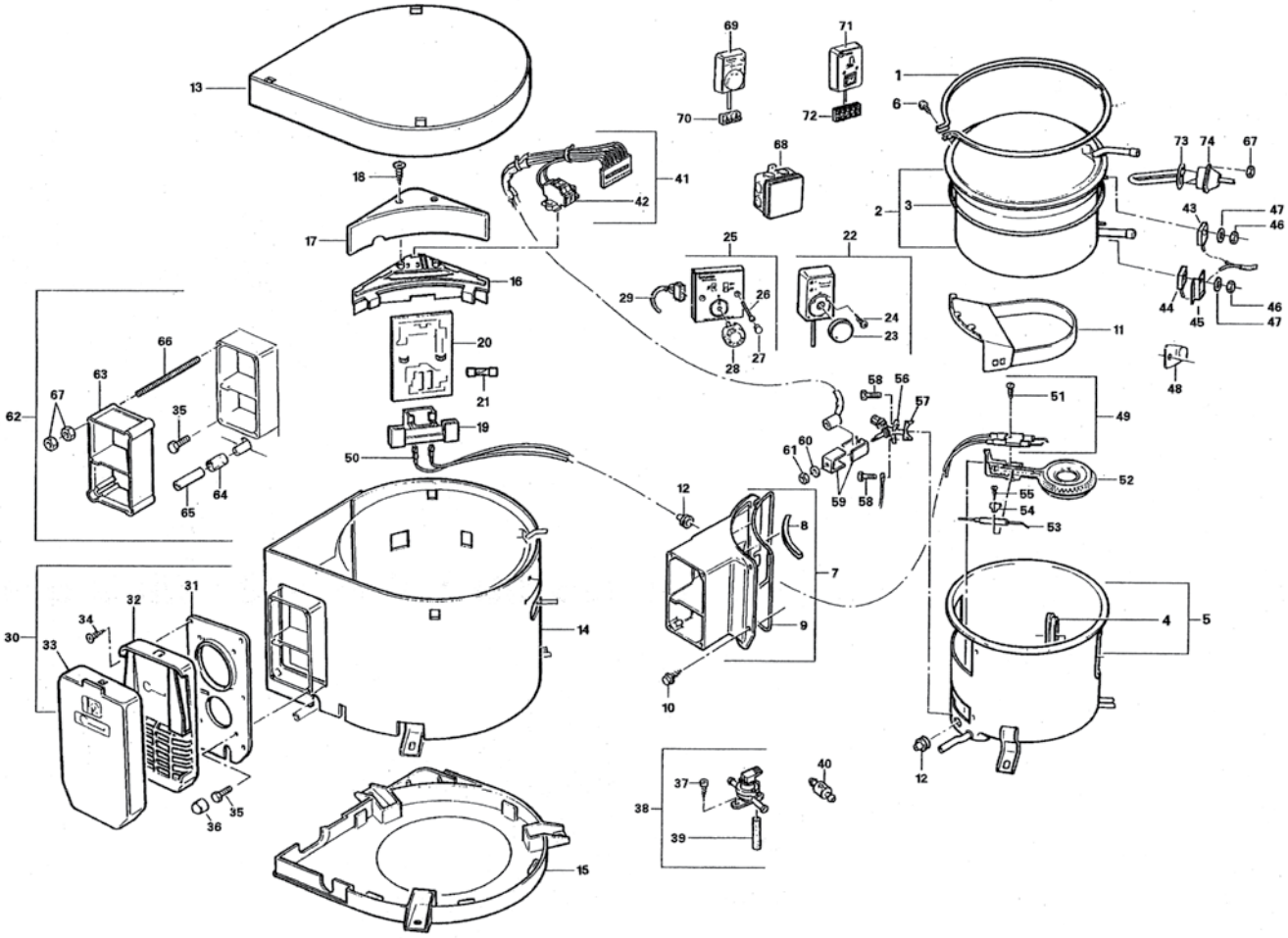

If a part has no Grove number against it, we can order from Truma if available

Truma Miscellaneous

Ducting
70mm Ø black
10m roll **801291**

UT adaptor
801329

Variable duct clip
801818

Duct clips VRS 72mm
839560

Duct shut-off SP2 remote
840121

Cowl cover KKC cream
834021

Control panel E2400
802400

Control knob E2400
897700

P4 wall switch beige
801841

Therme heating element
814200

Therme control panel
819900

Therme water container
801500

Straight valve
823110

Manifold valves
VK2-8mm **824111**
VK3-8mm **824131**
VK4-8mm **824151**
VK3-10mm **824132**
VK4-10mm **824152**

Triomatic gas hose
150cm
850617

Elbow for combi
834151

Combi control panel
859000

Control panel beige ultraheat 2
898500

Control panel clear ultraheat 2
898400

Ultraflow non return valve (JG)
846880

Ultraflow adaptor push fit-flexible hose
846999

Ultraflow non return valve flexible hose
846900

Ultrastore control panel
806700

Ultrastore grill
White **807000**
Ivory **807200**

Ultrastore elbow red
834153

Control knob ultrastore
899400

Grill for ultrastore 2&3
843200

Ultrastore accessory pack
871300

Ultrastore cowl grill KB53
871870

Elbow for ultrastore grey
870151

Elbow for ultrastore blue
870153

Removal tool for KB52
871875

If a part has no Grove number against it, we can order from Truma if available

For greater working flexibility why not order online!

www.groveproducts.co.uk

Not got The Big Orange Book to hand and urgently need specific Truma spares or any of our leisure accessories and spare parts?

No need to worry, simply contact the sales office and register today to order online.

Grove Products making your working day easier.